DRAWING NO. 8904914

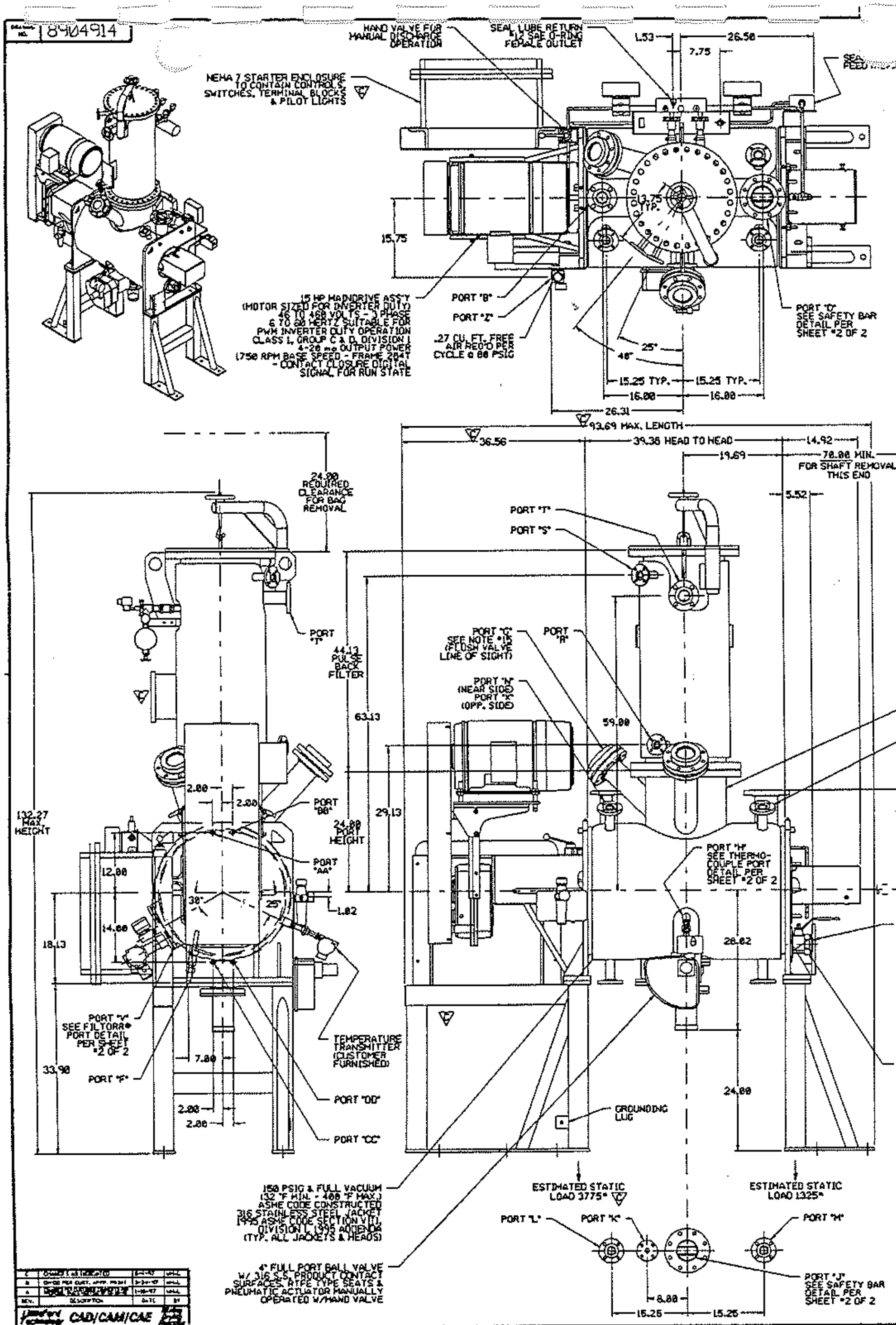

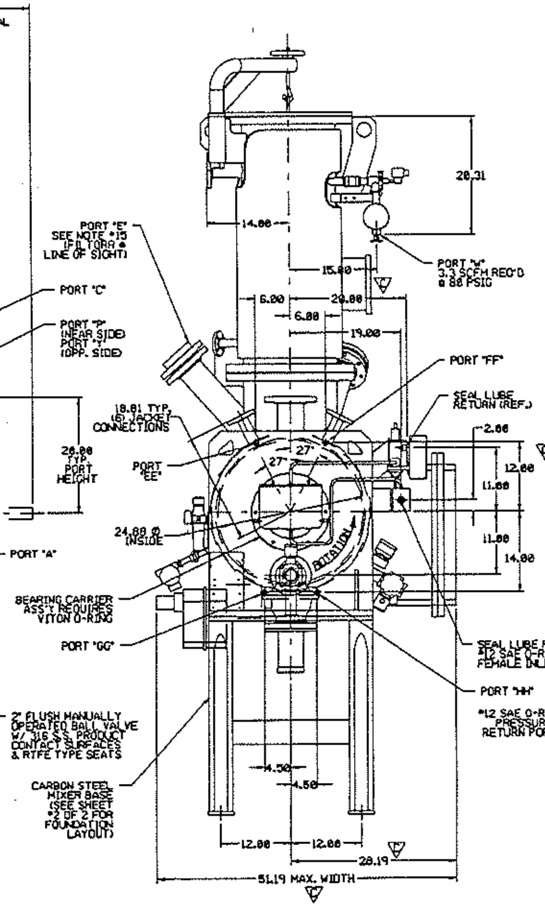

MIXER PORT SCHEDULE

PORT DESIGNATION	NOMINAL SIZE	SERVICE	CONNECTION TYPE	GASKET/O-RING MATERIAL	PRODUCT CONTACT SURFACE MATERIAL
A	2.00	SIDE DRAIN	NPTF VALVE END	N/A	316 STAINLESS STEEL
B	2.00	EXPLOSION RELIEF	150# ANSI PATTERN - R.F. FLG.	CUSTOMER FURNISHED	316 STAINLESS STEEL
C	15.50 I.D.	VAPOR/FILTER MOUNT	PAD	GARLOCK 3000	316 STAINLESS STEEL
D	4.00	SOLID FEED CHARGE	150# ANSI PATTERN - R.F. FLG.	CUSTOMER FURNISHED	316 STAINLESS STEEL
E & G	4.00	SIGHT GLASS	150# ANSI PATTERN - R.F. FLG.	GARLOCK 3000	316 STAINLESS STEEL
F	.50	LIQUID FEED	NPTM PIPE	N/A	316 STAINLESS STEEL
H	.75	THERMOWELL	NPTF PER DETAIL SHEET #2 OF 2	N/A	316L STAINLESS STEEL
J	4.00	SOLIDS DISCHARGE	150# ANSI PATTERN - R.F. FLG.	GARLOCK 3000	316 STAINLESS STEEL
K	1.00	LIQUID PLUGGED CONTOUR DRAIN	150# ANSI PATTERN - R.F. FLG.	GARLOCK 3000	316 STAINLESS STEEL
L,M,N,P,X & Y	1.50	MIXER JACKET INLET/OUTLET	150# ANSI PATTERN - R.F. FLG.	CUSTOMER FURNISHED	316 STAINLESS STEEL
R & S	1.00	P.B. FILTER JACKET INLET/OUTLET	150# ANSI PATTERN - R.F. FLG.	CUSTOMER FURNISHED	316 STAINLESS STEEL
T	2.00	VAPOR OUTLET	150# ANSI PATTERN - R.F. FLG.	CUSTOMER FURNISHED	316 STAINLESS STEEL
V	6.00 I.D.	FILTORR	PAD	PTFE GSKT/KALREZ O-RG	316 STAINLESS STEEL
W	.75	P.B. NITROGEN INLET	NPTF 3000# COUPLING	N/A	316 STAINLESS STEEL
Z	.25	FILTER/REGULATOR INLET	NPTF FITTING	N/A	N/A
AA THRU HH	.50	HEATED HEADS INLET/OUTLET	NPTF 3000# COUPLING	N/A	N/A

INSTALLATION DIMENSIONS

1. TOLERANCES ON UNIT ENVELOPE DIMENSIONS ARE ± 2%.
2. PORT LOCATIONS WILL BE HELD TO ± 1/4" OF INTENDED POSITION.
3. BASE MOUNTING HOLES WILL BE HELD TO ± 1/8" OF INTENDED POSITION.
4. ANGLE OF PORT CENTERLINE FROM INTENDED AXIS WILL BE HELD TO ± 1/2° IN ANY DIRECTION.
5. BOLT HOLES ON PORTS WILL BE HELD TO ± 1/8" OF INTENDED POSITION.

ENGINEERING NOTES:

1. INTERIOR OF MIXER & ALL PRODUCT CONTACT SURFACES CONSTRUCTED OF TYPE 316 STAINLESS STEEL POLISHED TO A #120 GRIT FINISH. VESSEL DESIGNED & CONSTRUCTED FOR FULL VACUUM TO 50 PSIG INTERNAL @ 400 °F. CUSTOMER TO PROVIDE PROTECTION AGAINST OVERPRESSURE.
2. NON-STAINLESS STEEL EXTERIOR COMPONENTS TO BE PAINTED HIGH-TEMPERATURE IVORY.
3. MAINSHAFT TO HAVE PLOW-SHAPED MIXING TOOLS CONCENTRICALLY ARRANGED & SECURELY BOLTED WITHIN HEAVY DUTY PLOW POCKETS. SEE PLOW CONNECTION DETAIL PER SHEET #2 OF 2. HEAD SCRAPERS TO BE BOLTED ONTO END PLOWS.
4. MAINSHAFT SPEED TO BE MAXIMUM 140 RPM @ 60 HERTZ.
5. A 6 SQUARE FOOT PULSEBACK FILTER IS CONSTRUCTED OF TYPE 316 STAINLESS STEEL PRODUCT CONTACT SURFACES & IS EQUIPPED WITH A REMOVABLE HEAD & TYPE 316 STAINLESS STEEL JACKET. JACKET TO BE 150 PSIG & FULL VACUUM (32 °F MIN. - 400 °F MAX.). PULSEBACK FILTER IS DESIGNED & CONSTRUCTED FOR FULL VACUUM TO 50 PSIG INTERNAL PRESSURE. THE FILTER BAGS, MADE OF TETRATEC WITH NOMEX COATING (8-11 CFM), ARE MOUNTED OVER TYPE 316 STAINLESS STEEL CAGES & CAN BE EASILY REMOVED THRU THE TOP OF THE UNIT.
6. DOUBLE MECHANICAL SEALS INSTALLED ON MAINSHAFT. SEALS ARE CARTRIDGE MOUNT & CONSIST OF (2) SEAL SETS ORIENTED BACK TO BACK, (1) TUNG CAR/TUNG CAR SEAL SET INBOARD W/ KALREZ O-RING & (1) TUNG CAR/CARBON SEAL SET OUTBOARD W/VITON O-RING PROVIDING A CONTAINED AREA IN WHICH KEROSENE IS CIRCULATED AT A POSITIVE DIFFERENTIAL PRESSURE.
7. SEAL LUBE SYSTEM INCLUDES NEMA 7 ELECTRICAL CONTROLS, A RESERVOIR WITH SIGHT GLASS, CIRCULATION PUMP, HEAT EXCHANGER, FILTER, FLOW SWITCH & OTHER INSTRUMENTATION INCLUDING PRESSURE & TEMPERATURE GAUGES. SYSTEM CAN BE INTEGRATED WITH OTHER CONTROLS TO PROVIDE REMEDIAL ACTION IF SEALS FAIL. SEAL LUBE MEDIUM IS KEROSENE. SYSTEM DESIGNED FOR FUTURE CHOPPER ADDITION.
8. ELECTRICAL DEVICES LOCATED ON MIXER TO BE WIRED TO NEMA 7 STARTER ENCLOSURE.
9. NO EXTERNAL LOADS CAN BE APPLIED TO MIXER.
10. JACKET FLOW RATE TO PRODUCE 10,000 REYNOLDS NUMBER AT 5 PSIG MAX. PRESSURE DROP IN MIXER JACKET IS 50 GPM TOTAL. (INCLUDES DRUM JACKET, PULSEBACK FILTER JACKET, DRIVE HEAD & STUB HEAD)
11. TOTAL STATIC WEIGHT OF MIXER (EMPTY) IS APPROX. 5100#.
12. TOTAL VESSEL CAPACITY: 10 CUBIC FEET; NOMINAL WORKING CAPACITY: 6 CUBIC FEET; WORKING RANGE: 3-7 CUBIC FEET
13. VARIABLE FREQUENCY CONTROLLER FOR MAINDRIVE MOTOR; REMOTE SIGNAL REQUIREMENTS = 4-20 mA NON-ISOLATED SIGNAL PROPORTIONAL TO POWER, DRY CONTACT CLOSURE TO INDICATE RUN STATE & FAULT STATE. 26" HIGH X 26" WIDE X 15" DEEP NEMA 12 WALL MOUNT ENCLOSURE 460 VOLT - 3 PHASE - 60 HERTZ (MUST BE LOCATED IN A NON-HAZARDOUS AREA)
14. HEADS TO BE HEATED AS REQUIRED; NO COOLING ON HEADS.
15. SIGHT GLASS TO BE PRESSURE PRODUCTS FLANGE UNIT MODEL 'I'.
16. ALL WELDS & NOZZLE PENETRATIONS TO BE GROUND SMOOTH.

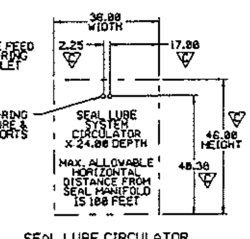

SEAL LUBE CIRCULATOR
SCALE: 1/16"=1'

CERTIFIED PRINT
BY: ______
TITLE: ______
DATE: ______

IMPORTANT
THIS UNIT IS PROVIDED WITH AN A.S.M.E. RATED JACKET. IT IS THE CUSTOMERS RESPONSIBILITY TO PROVIDE THE NECESSARY VALVING TO PREVENT JACKET PRESSURES FROM EXCEEDING THE PRESSURE RATING SHOWN ON CODE NAMEPLATE.

SHEET #1 OF 2

UNLESS SPECIFIED: DEBURR ALL HOLES, BREAK SHARP EDGES. TOLERANCES UNLESS SPECIFIED: FABRICATED 0-20 IN. ± 1/16, 20-100 IN. ± 1/8, 100 + IN. ± 3/16, ANGLES ± 1/2°; MACHINED .X ± .020, .XX ± .010, .XXX ± .005, ANGLES ± 1/4°

Littleford Day — 8904914 C

Littleford Technology CAD/CAM/CAE

DRAWING NO. 8904914

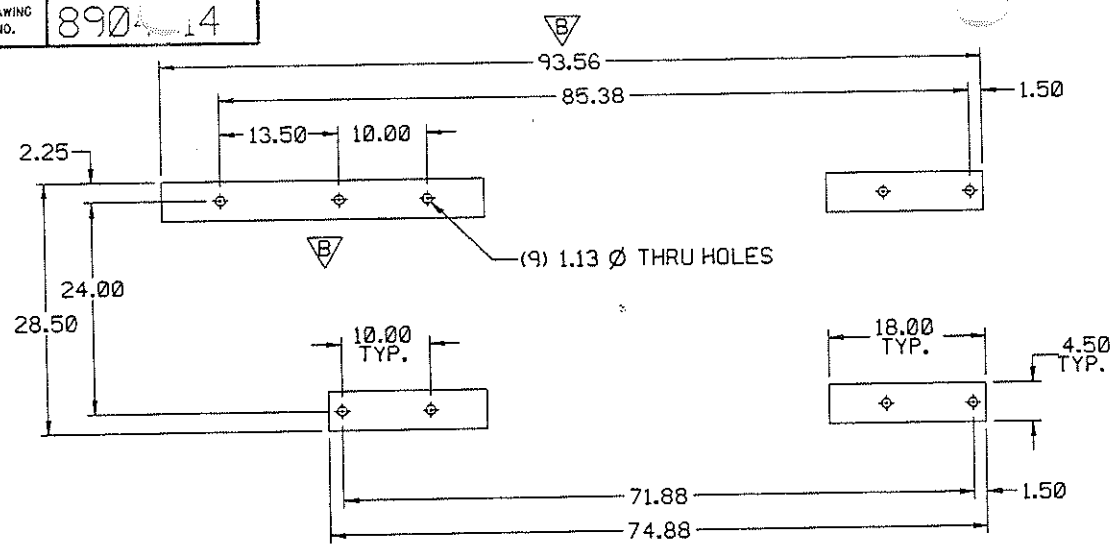

FOUNDATION LAYOUT
SCALE: 3/32"=1"

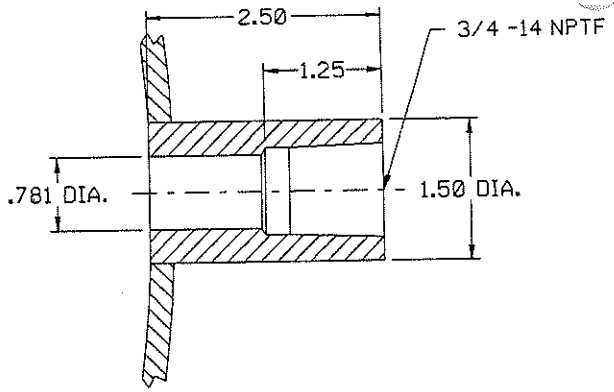

THERMOCOUPLE PORT DETAIL
SCALE: FULL
NOTE: DEPTH INTO VESSEL OF CUSTOMER TEMPERATURE ELEMENT TO BE 1.00 MAXIMUM

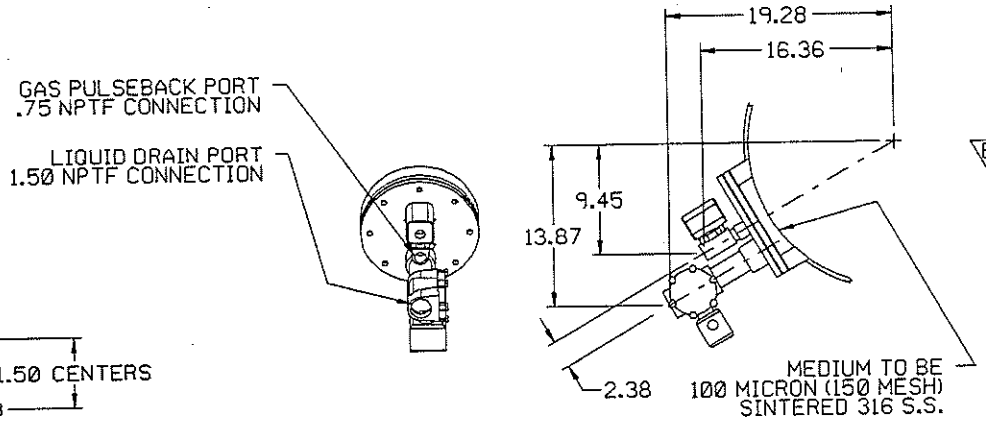

FILTORR® PORT DETAIL
SCALE: 1/8"=1"
SYSTEM TO INCLUDE CONTROLS

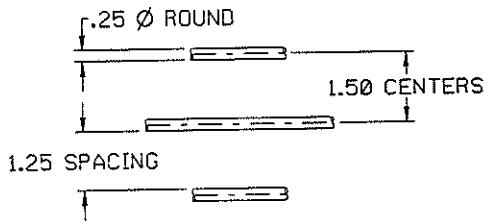

SAFETY BAR DETAIL
SCALE: 1/2"=1"

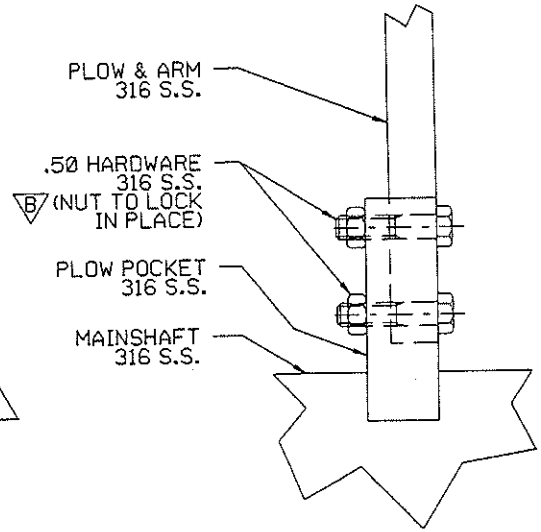

PLOW CONNECTION DETAIL
SCALE: 1/2"=1"

CERTIFIED PRINT
BY: _____
TITLE: _____
DATE: _____

SHEET #2 OF 2

REV.	DESCRIPTION	DATE	BY
C			
B	ADDED NOTE & PLOW ARM LOCKING NUTS UPDATED FOUNDATION LAYOUT	6-5-97	WHvL
A	CH'GD PER CUST. APPR. PRINT	3-26-97	WHvL

Littleford Technology CAD/CAM/CAE Mixing Drying Reacting

UNLESS SPECIFIED
DEBURR ALL HOLES
BREAK SHARP EDGES
✓ FINISH UNLESS SPECIFIED

TOLERANCES UNLESS SPECIFIED	
FABRICATED	MACHINED
0-20 IN. ± 1/16	.X ± .020
20-100 IN. ± 1/8	.XX ± .010
100 + IN. ± 3/16	.XXX ± .005
ANGLES ± 1/2°	ANGLES ± 1/4°

LITTLEFORD DAY, INC. CLAIMS PROPRIETARY RIGHTS IN THE MATERIAL DISCLOSED HEREON. THIS DRAWING IS ISSUED FOR ENGINEERING INFORMATION ONLY AND MAY NOT BE USED FOR MANUFACTURING PURPOSES WITHOUT WRITTEN PERMISSION FROM LITTLEFORD DAY, INC. TO THE USER.

Littleford Day
LITTLEFORD DAY, INC.
7451 EMPIRE DR. FLORENCE, KY. 41042-2985

DVT-300-D
VACUUM CONSTRUCTION
BF GOODRICH

DR. WHvL	DATE: 1-21-97		
CK.	SCALE:		
AP.	DATE:	8904914	REV. B

DRAWING NO. 1000866

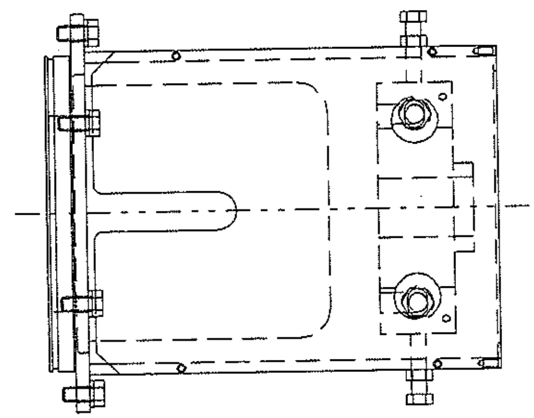

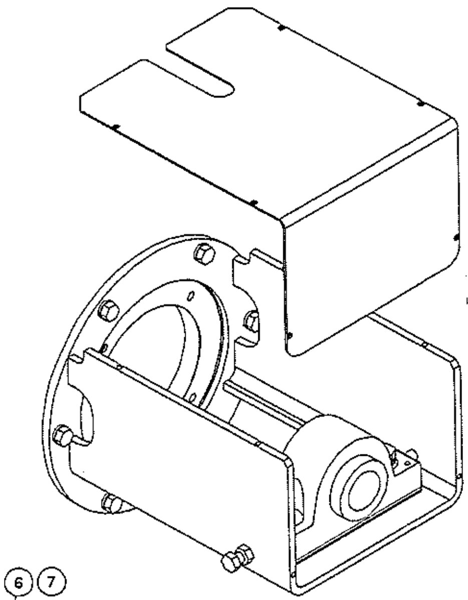

NOTES:
1. DIAL INDICATE & ADJUST PILLOW BLOCK SO THAT MAINSHAFT IS CONCENTRIC TO SEAL WITHIN .004 T.I.R.
2. ADJUST PILLOW BLOCK SO THAT INNER RACE IS +/- .03 PAST CENTERLINE FOR THERMAL EXPANSION.

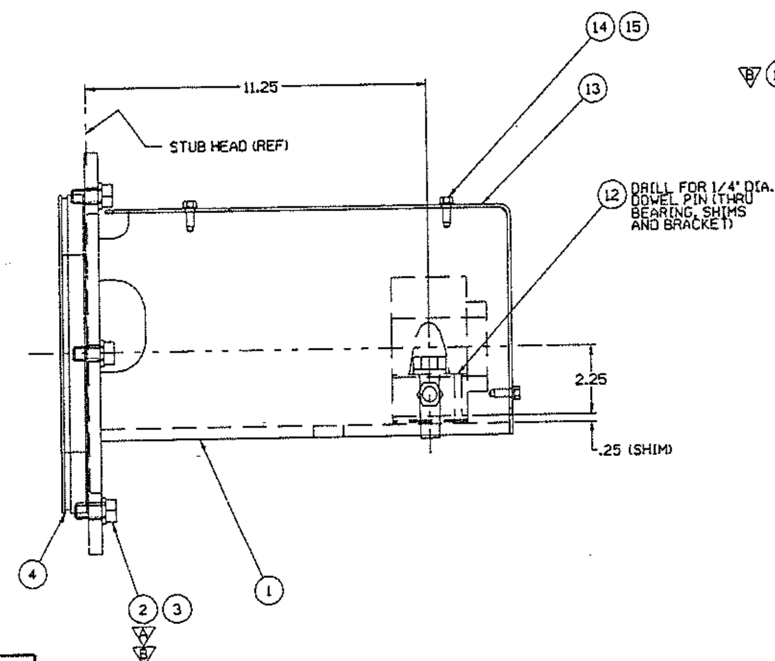

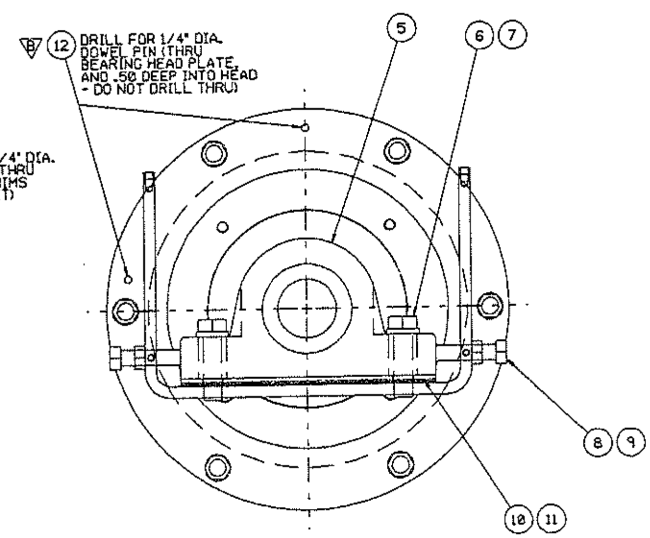

REV.	DESCRIPTION	DATE	BY
C			
B	#2 WAS 3L NUT; ADDED PINNING	6-16-97	WH.L
A	ITEM #2 WAS SCREW	3-21-97	WH.L

Littleford Technology CAD/CAM/CAE Mixing Drying Reacting

UNLESS SPECIFIED	TOLERANCES UNLESS SPECIFIED	
DEBURR ALL HOLES BREAK SHARP EDGES	FABRICATED	MACHINED
	0-20 IN. ± 1/16	.X ± .020
	20-100 IN. ± 1/8	.XX ± .010
	100 + IN. ± 3/16	.XXX ± .005
√ FINISH UNLESS SPECIFIED	ANGLES ± 1/2°	ANGLES ± 1/4°

LITTLEFORD DAY, INC. CLAIMS PROPRIETARY RIGHTS IN THE MATERIAL DISCLOSED HEREON. THIS DRAWING IS ISSUED FOR ENGINEERING INFORMATION ONLY AND MAY NOT BE USED FOR MANUFACTURING PURPOSES WITHOUT WRITTEN PERMISSION FROM LITTLEFORD DAY, INC. TO THE USER.

Littleford Day
LITTLEFORD DAY, INC.
7451 EMPIRE DR. FLORENCE, KY. 41042-2985

1-15/16 DIA. BEARING CARRIER INSTL.

DYT -3000

DR. SWO	DATE: 12/4/96
CK.	SCALE: 1/2"=1"
AP.	DATE:
1000866	REV. B

1000866 M41*F13	TOLERANCES UNLESS SPECIFIED	FABRICATED	0-20 IN. ± 1/16 100 + IN. ± 3/16 20-100 IN. ± 1/8 ANGLES ± 1/2°	MACHINED	.X ± .020 .XX ± .010 .XXX ± .005 ANGLES ± 1/4°

ITEM	PART NO.	PART NAME	REQ.	WT. EA.
1	1000869M41*F13	BEARING CARRIER WELDMENT	1	
2 B	9801331M16PFA5	SCREW 1/2"-13 NC X 1 1/4" LG. HHC	6	
3	9801561M16-FNA	WASHER LOCK 1/2 DIA.	6	
4	1012465	O-RING 10 I.D. X 1/8 DIA #274 VITON	1	
5	4105754	BEARING P.B. 1-15/16 EXP	1	
6	9801368M01-FG2	SCREW HHC 5/8-11UNC X 2-1/4 LG	2	
7	9801563M01-FNA	WASHER LOCK 5/8 DIA	2	
8	9801337M01-FG2	SCREW HHC 1/2-13UNC X 2 LG	2	
9	9801167M01-FNA	NUT JAM 1/2-3 UNC	2	
10	4104898M01-FNA	SHIM #10 GA FOR 1-15/16 P.B. BRG	3	
11	4104899M01-FNA	SHIM #16 GA FOR 1-15/16 P.B. BRG	2	
12	4101671M04-FNA	PIN DOWEL 1/4 DIA X 2 LG	4 B	
13	1000870M01-FNA	COVER BEARING	1	
14	9801264M01-FG2	SCREW HHC 1/4-20 UNC X 1/2 LG	6	
15	9801557M01-FNA	WASHER LOCK 1/4 DIA	6	

LITTLEFORD DAY, INC. CLAIMS PROPRIETARY RIGHTS IN THE MATERIAL DISCLOSED HEREON. THIS DRAWING IS ISSUED FOR ENGINEERING INFORMATION ONLY AND MAY NOT BE USED FOR MANUFACTURING PURPOSES WITHOUT WRITTEN PERMISSION FROM LITTLEFORD DAY, INC. TO THE USER.

REV.	DESCRIPTION	DATE	BY
H			
G			
F			
E			
D			
C			
B	ITEM #2 WAS P.N. 9801149M18PFA41 ITEM #12 WAS QTY OF 2	6-16-97	WHvL
A	#2 WAS P.N. 9801331M16-FNA	3-21-97	WHvL

Littleford Day

LITTLEFORD DAY, INC.
7451 EMPIRE DR. FLORENCE, KY. 41042-2985

1-15/16 DIA. BEARING CARRIER INSTL

DR. SWD	DATE: 12/9/96
CK.	SCALE:
AP.	DATE:

1000866
M41*F13

Drawing No. 1000935

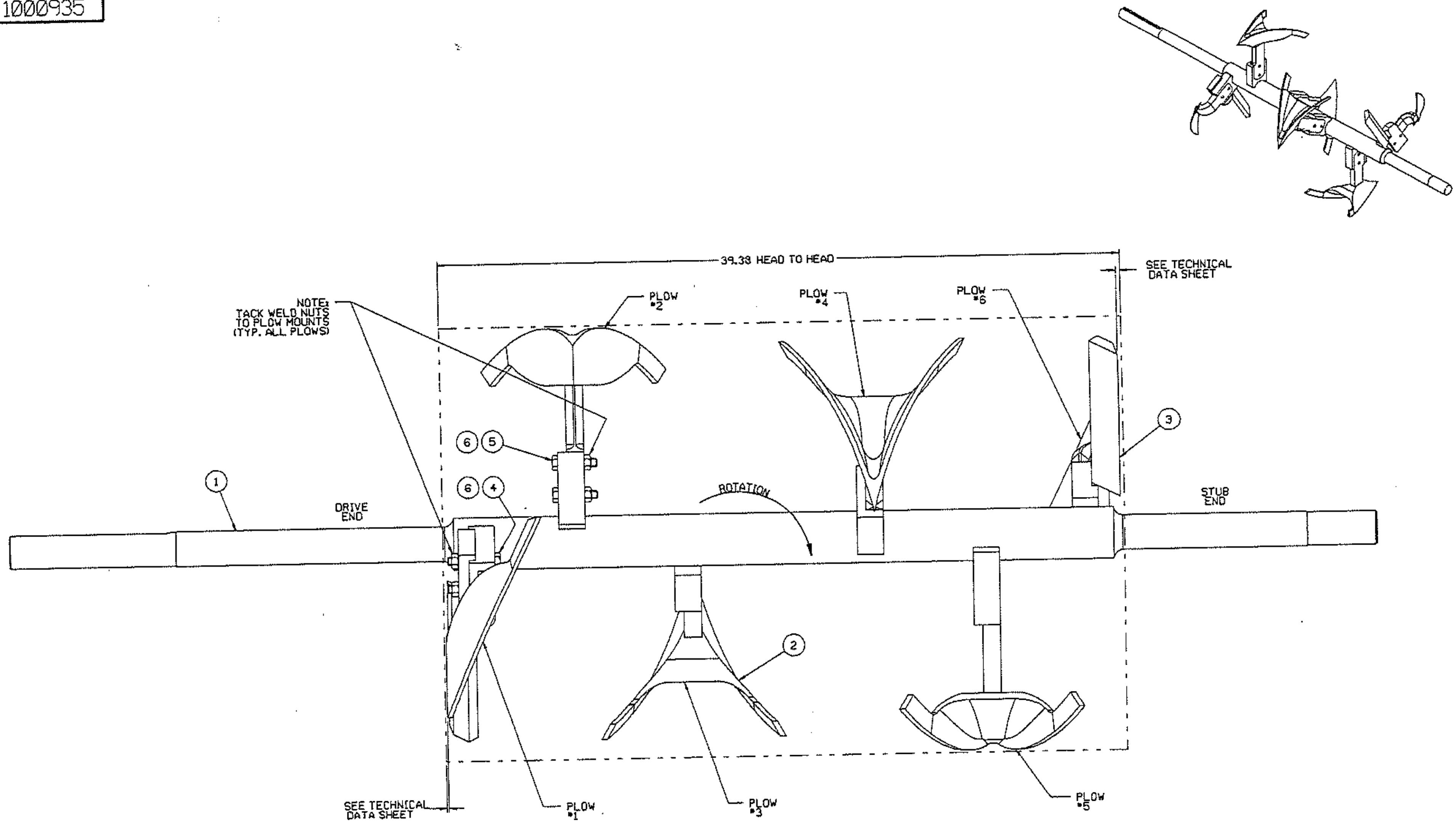

REV.	DESCRIPTION	DATE	BY
C			
B			
A			

Littleford Technology CAD/CAM/CAE

UNLESS SPECIFIED	TOLERANCES UNLESS SPECIFIED	
	FABRICATED	MACHINED
DEBURR ALL HOLES	0-20 IN. ± 1/16	.X ± .020
BREAK SHARP EDGES	20-100 IN. ± 1/8	.XX ± .010
✓ FINISH UNLESS SPECIFIED	100 + IN. ± 3/16	.XXX ± .005
	ANGLES ± 1/2°	ANGLES ± 1/4°

LITTLEFORD DAY, INC. CLAIMS PROPRIETARY RIGHTS IN THE MATERIAL DISCLOSED HEREON. THIS DRAWING IS ISSUED FOR ENGINEERING INFORMATION ONLY AND MAY NOT BE USED FOR MANUFACTURING PURPOSES WITHOUT WRITTEN PERMISSION FROM LITTLEFORD DAY, INC. TO THE USER.

Littleford Day
LITTLEFORD DAY, INC.
7451 EMPIRE DR. FLORENCE, KY. 41042-2985

MAINSHAFT INSTALLATION - 3" DIA.

DVT-388-D

DR. WHvL	DATE: 3-1-97
CK.	SCALE: 3/8"=1"
AP.	DATE:
1000935	REV.

1000935 M16-F13	TOLERANCES UNLESS SPECIFIED	FABRICATED	0-20 IN. ± 1/16 100 + IN. ± 3/16 20-100 IN. ± 1/8 ANGLES ± 1/2°	MACHINED	.X ± .020 .XX ± .010 .XXX ± .005 ANGLES ± 1/4°

ITEM	PART NO.	PART NAME	REQ.	WT. EA.
1	1000934M16-F13	MAINSHAFT MACHINING	1	
2	1000944M16-F13	PLOW SET	1	
3	1000940M16-F13	HEAD SCRAPER INSTALLATION	1	
4	9801343M16-FG2	SCREW HHC 1/2"-13 NC X 2 3/4" LG	4	
5	9801339M16-FG2	SCREW HHC 1/2"-13 NC X 2 1/4" LG.	8	
6	9801149M16-FG2	NUT HEX 1/2"-13	12	

LITTLEFORD DAY, INC. CLAIMS PROPRIETARY RIGHTS IN THE MATERIAL DISCLOSED HEREON. THIS DRAWING IS ISSUED FOR ENGINEERING INFORMATION ONLY AND MAY NOT BE USED FOR MANUFACTURING PURPOSES WITHOUT WRITTEN PERMISSION FROM LITTLEFORD DAY, INC. TO THE USER.

REV.	DESCRIPTION	DATE	BY
H			
G			
F			
D			
C			
B			
A			

Littleford Day
LITTLEFORD DAY, INC.
7451 EMPIRE DR. FLORENCE, KY. 41042-2985

MAINSHAFT INSTALLATION
3" DIA. SHAFT

DVT-300-D

DR. WHvL	DATE: 3-3-97
CK.	SCALE:
AP.	DATE:
1000935	
M16-F13	

DRAWING NO.	1000991

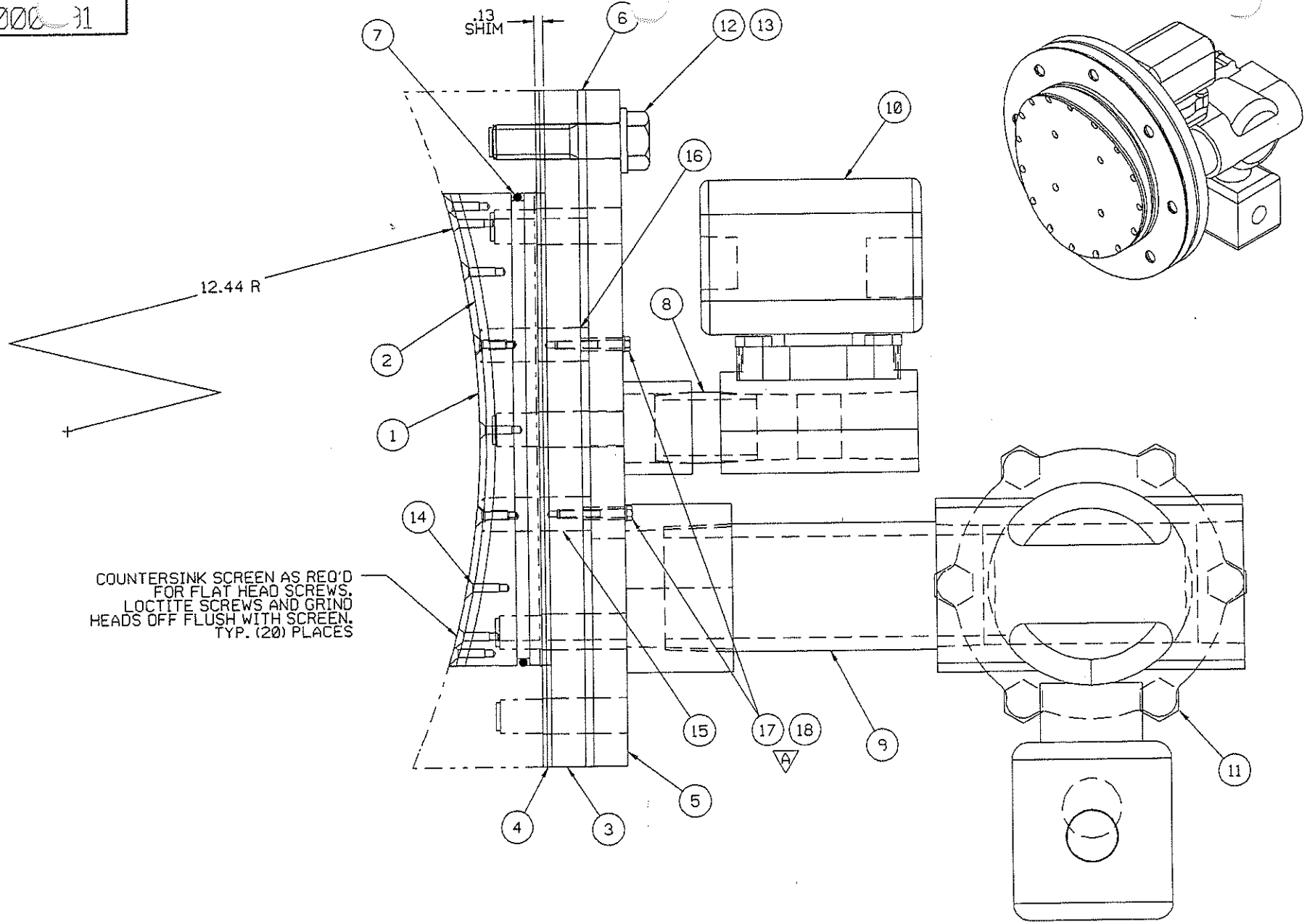

REV.	DESCRIPTION	DATE	BY
C			
B			
A	ADDED ITEM #17 & 18	6-19-97	WHVL

Littleford Technology CAD/CAM/CAE Mixing Drying Reacting

UNLESS SPECIFIED	TOLERANCES UNLESS SPECIFIED	
DEBURR ALL HOLES	FABRICATED	MACHINED
BREAK SHARP EDGES	0-20 IN. ± 1/16	.X ± .020
	20-100 IN. ± 1/8	.XX ± .010
✓ FINISH UNLESS SPECIFIED	100 + IN. ± 3/16	.XXX ± .005
	ANGLES ± 1/2°	ANGLES ± 1/4°

LITTLEFORD DAY, INC. CLAIMS PROPRIETARY RIGHTS IN THE MATERIAL DISCLOSED HEREON. THIS DRAWING IS ISSUED FOR ENGINEERING INFORMATION ONLY AND MAY NOT BE USED FOR MANUFACTURING PURPOSES WITHOUT WRITTEN PERMISSION FROM LITTLEFORD DAY, INC. TO THE USER.

Littleford Day
LITTLEFORD DAY, INC.
7451 EMPIRE DR. FLORENCE, KY. 41042-2985

FILTORR INSTL. DVT-300-D

DR. MEB	DATE: 3-24-97	
CK.	SCALE: FULL	
AP.	DATE:	
1000991		REV. A

1000991 M43*FUP	TOLERANCES UNLESS SPECIFIED	FABRICATED	0-20 IN. ± 1/16 100 + IN. ± 3/16 20-100 IN. ± 1/8 ANGLES ± 1/2°	MACHINED	.X ± .020 .XX ± .010 .XXX ± .005 ANGLES ± 1/4°

ITEM	PART NO.	PART NAME	REQ.	WT. EA.
1	1000992	FILTORR SCREEN 100 MICRON	1	
2	1000993MG7-FNA	SCREEN GASKET	1	
3	1000996M16-FNA	FILTORR BODY	1	
4	1000994M16-FNA	SHIM #16 GA.	2	
5	1001001M16*FUP	FILTORR COVER WLDMT.	1	
6	1000998MG7-FNA	COVER GASKET	1	
7	1011136	O-RING #261 (KALREZ)	1	
8	1101425M16-FNA	3/4" SHORT NIPPLE	1	
9	PIPE SCH 40	1-1/2" x 5" LG. T.B.E. 316 SS	1	
10	1000999	3/4" SOLENOID VALVE	1	
11	1001000	1-1/2" SOLENOID VALVE	1	
12	9801337M16PFA5	1/2-13 NC x 2" LG. H.H.C.S.	8	
13	9801534M16-FNA	1/2" FLAT WASHER	8	
14	4201150M16PFA5	#5-40 x 3/8" LG. F.H.S.	20	
15	1000995M16-FNA	SCREEN SUPPORT	4	
16	1001002MG7-FNA	SCREEN SUPPORT GASKET	4	
17 (A)	1001043M16-FG2	SCREW #5-40 NC X 1" LG. RHM (B)	4	
18 (A)	9801553M16-FNA	WASHER LOCK #5	4	

LITTLEFORD DAY, INC. CLAIMS PROPRIETARY RIGHTS IN THE MATERIAL DISCLOSED HEREON. THIS DRAWING IS ISSUED FOR ENGINEERING INFORMATION ONLY AND MAY NOT BE USED FOR MANUFACTURING PURPOSES WITHOUT WRITTEN PERMISSION FROM LITTLEFORD DAY, INC. TO THE USER.

REV.	DESCRIPTION	DATE	BY
H			
G			
F			
D			
C			
B	ITEM #17 WAS HHMS	6-24-97	WHvL
A	ADDED ITEM #17 & 18	6-19-97	WHvL

Littleford Day

LITTLEFORD DAY, INC.
7451 EMPIRE DR. FLORENCE, KY. 41042-2985

FILTORR INSTL. DVT-300-D

DR. MEB	DATE: 3-24-97
CK.	SCALE:
AP.	DATE:
1000991	
M43*FUP	

Littleford

A Littleford Group COMPANY

LITTLEFORD BROS., INC.

LUBRICATION CHART

1. MAIN MOTOR BEARINGS	SEE MOTOR MAINTENANCE INSTRUCTIONS.
2. CHOPPER MOTOR	REMOVE GREASE PLUG AND RELIEF PLUG. PUMP GREASE INTO BOTTOM OF CHAMBER UNTIL NEW GREASE EXITS FROM TOP. OPERATE MOTOR A MINIMUM OF ONE HOUR. REPLACE GREASE PLUGS.
3. CHOPPER PACKING (STANDARD PACKING W/LANTERN RING ONLY)	REMOVE GREASE PLUG FROM BOTTOM OF GLAND AND PUMP GREASE UNTIL NEW GREASE EXITS FROM RELIEF VALVE* ON TOP OF GLAND. REPLACE GREASE PLUG.
4. MAIN SHAFT BEARINGS	REMOVE GREASE PLUG FROM BOTTOM OF BEARING CAVITY. PUMP GREASE INTO CAVITY UNTIL NEW GREASE EXITS FROM TOP OF RELIEF VALVE.*
5. MAIN SHAFT SEALS (STANDARD PACKING W/LANTERN RING ONLY)	REMOVE GREASE PLUG FROM BOTTOM OF GLAND AND PUMP GREASE UNTIL NEW GREASE EXITS FROM RELIEF VALVE* ON TOP OF GLAND. REPLACE GREASE PLUG.
6. DISCHARGE	CLEAN ZERK FITTINGS. PUMP ONE SHOT OF GREASE INTO EACH FITTING.
7. REDUCER	SEE REDUCER MAINTENANCE INSTRUCTIONS.
8. MECHANICAL COUPLING	SEE COUPLING MAINTENANCE INSTRUCTIONS.
9. MAIN DRIVE BELTS	CHECK ADJUSTMENT DURING LUBRICATING MAINTENANCE PERIOD.

* IF RELIEF VALVE IS MISSING, REMOVE PLUG FROM TOP AND REPLACE UPON COMPLETION OF LUBRICATION.

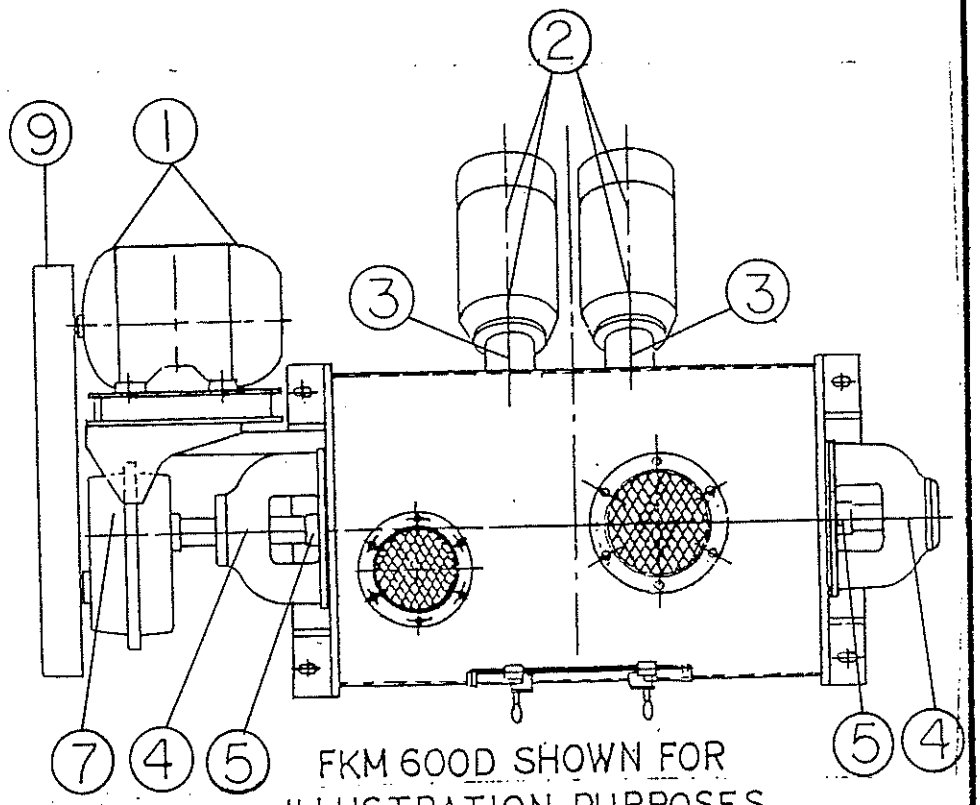

FKM 600D SHOWN FOR ILLUSTRATION PURPOSES

LUBRICATION SCHEDULE

1. MAIN MOTOR.....2400 HOURS OR 8 MONTHS
2. CHOPPER MOTORS.....750-1000 HOURS OR 2 MONTHS
3. CHOPPER PACKING.....75 HOURS OR 1 WEEK
4. MAINSHAFT BEARING.....1800 HOURS OR 6 MONTHS*
5. MAINSHAFT PACKING.....300 HOURS OR 1 MONTH
6. DISCHARGE.....1800 HOURS OR 6 MONTHS
7. REDUCER.....1800 HOURS OR 6 MONTHS
8. COUPLING .....2400 HOURS OR 8 MONTHS
9. DRIVE BELTS.....1800 HOURS OR 6 MONTHS

* FOR UNITS THAT RUN... 900 HOURS OR 2 MONTHS CONTINOUSLY

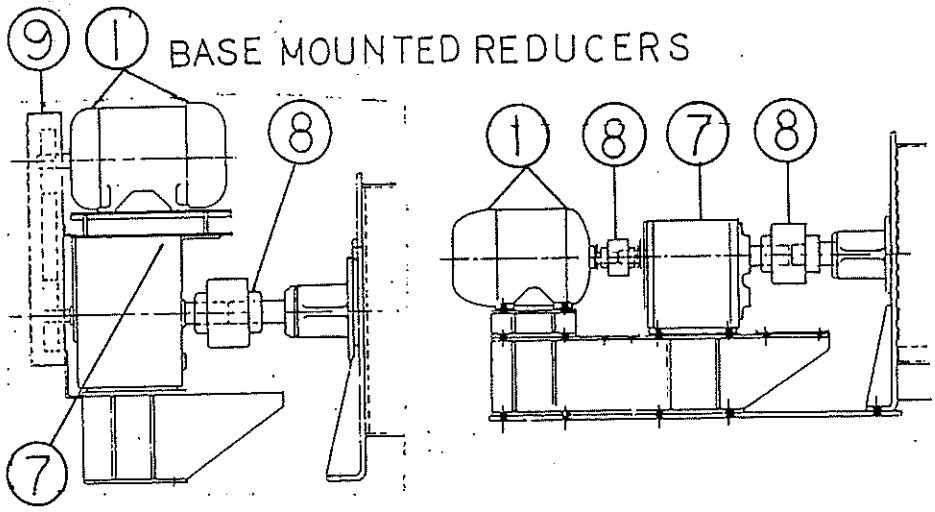

BASE MOUNTED REDUCERS

DISCHARGE

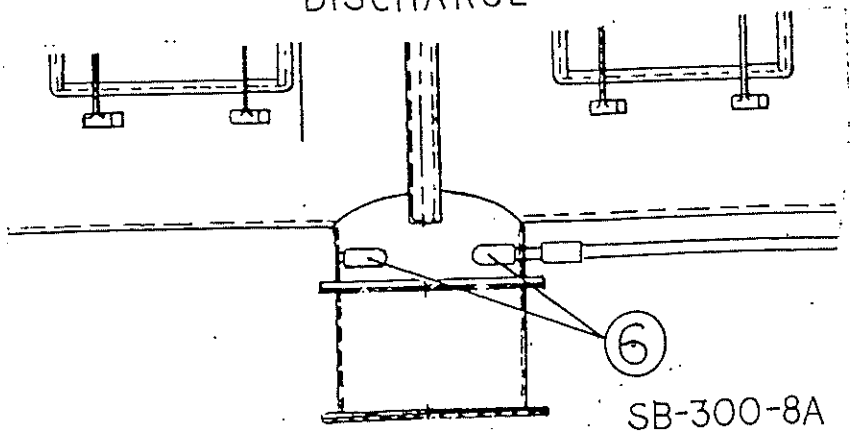

RECOMMENDED LUBRICANTS

MANUFACTURER	LUBRICANT
ALEMITE	LITHIUM #2
AMERICAN OIL CO.	AMOLITH #2
ATLANTIC REFINING	ATLANTIC LUBRICANT 54
CITIES SERVICE OIL CO.	TROJAN GREASE NPA2
CONTINENTAL OIL CO.	CONOCO SUPERLUBE
FISKE BROS. REFINING CO.	LUBRIPLATE NO. 630-2
GULF OIL CORPORATION	GULF CROWN GREASE #2
E.F. HOUGHTON & CO.	COSMOLUBE NO. 2
HUMBLE OIL & REFINING CO.	
IMPERIAL OIL LTD.	ESSO MP.GREASE H
KENDALL REFINING CO.	KENLUBE 5-4023
KEYSTONE LUBRICATING CO.	NO. 44 GREASE
NATIONAL REFINING CO.	ENARCO FLOTEX EP #2
OHIO OIL CO.	MARATHON 535 UJ GREASE
PHILLIPS PETROLEUM CO.	PHILUBE MULTIPURPOSE GREASE L2
PURE OIL COMPANY	POCO FIBRE GREASE #2
SHELL OIL COMPANY	ALVANIA GREASE NO.2
SINCLAIR REFINING CO.	SINCOLUBE GREASE
SOCONY MOBIL OIL CO.	MOBILUX NO. 2
STANDARD OIL CO. (CALIF.)	CHEVRON SA GREASE NO.2
STANDARD OIL CO. (OHIO)	SOHITRAN NO. 2
SUN OIL COMPANY	PRESTIGE 42
TEXACO INC.	MARFAK HEAVY DUTY NO. 2
UNION OIL CO. OF CALIF.	UNOBA 2

SB-300-8A

DRAWING NO.	1000965

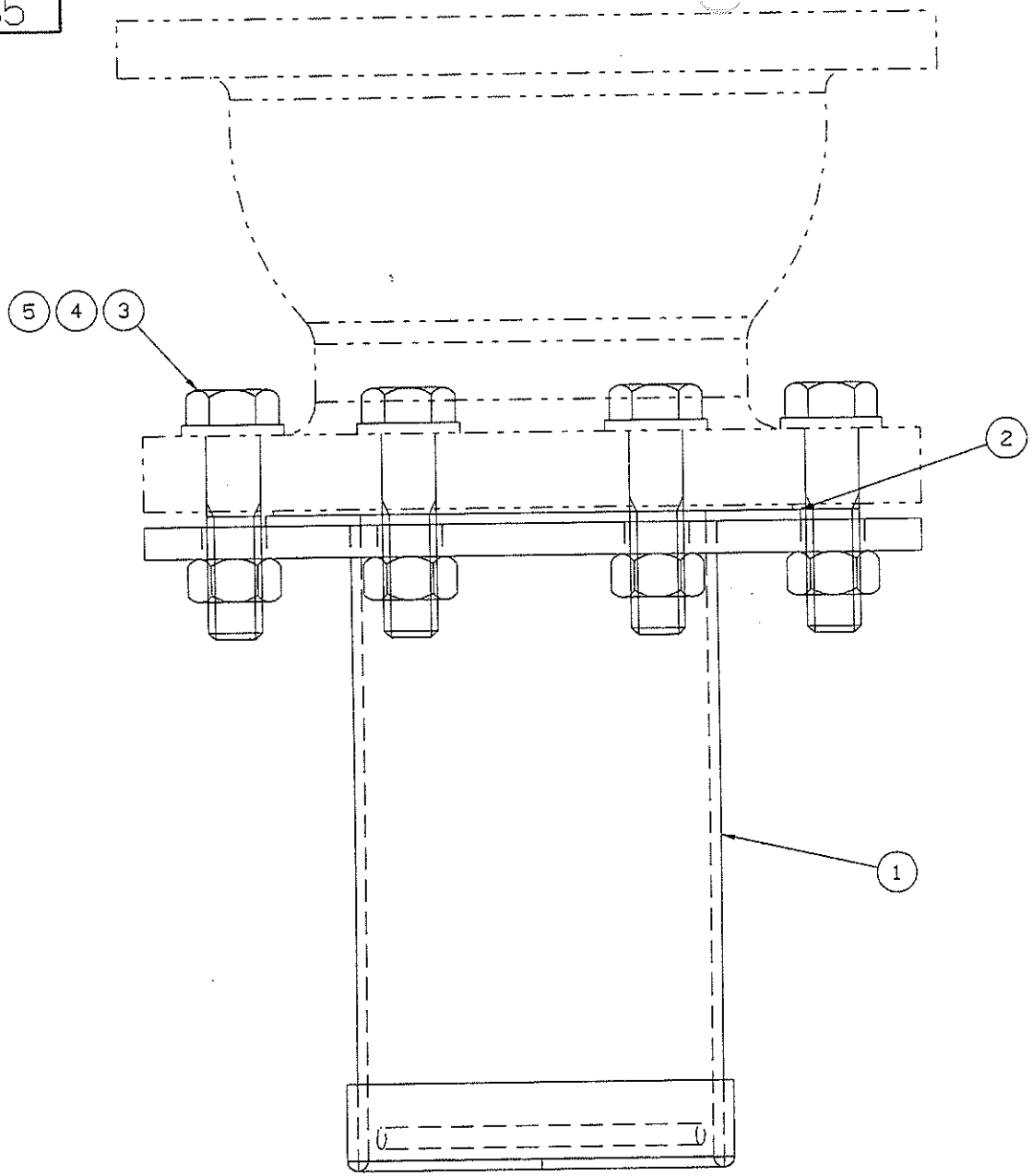

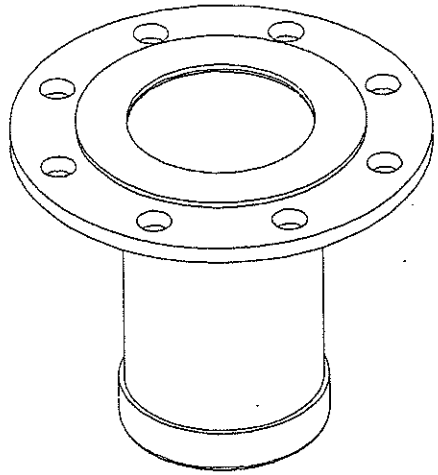

REV.	DESCRIPTION	DATE	BY
C			
B			
A			

Littleford Technology CAD/CAM/CAE Mixing Drying Reacting

UNLESS SPECIFIED
DEBURR ALL HOLES
BREAK SHARP EDGES
✓ FINISH UNLESS SPECIFIED

TOLERANCES UNLESS SPECIFIED	
FABRICATED	MACHINED
0-20 IN. ± 1/16	.X ± .020
20-100 IN. ± 1/8	.XX ± .010
100 + IN. ± 3/16	.XXX ± .005
ANGLES ± 1/2°	ANGLES ± 1/4°

LITTLEFORD DAY, INC. CLAIMS PROPRIETARY RIGHTS IN THE MATERIAL DISCLOSED HEREON. THIS DRAWING IS ISSUED FOR ENGINEERING INFORMATION ONLY AND MAY NOT BE USED FOR MANUFACTURING PURPOSES WITHOUT WRITTEN PERMISSION FROM LITTLEFORD DAY, INC. TO THE USER.

Littleford Day
LITTLEFORD DAY, INC.
7451 EMPIRE DR. FLORENCE, KY. 41042-2985

4" BALL VALVE SAFETY EXTENSION INSTALLATION

DR. WHvL	DATE: 3-5-97	
CK.	SCALE: FULL	
AP.	DATE:	
1000965		REV.

1000965 M43-F13	TOLERANCES UNLESS SPECIFIED	FABRICATED	0-20 IN. ± 1/16 100 + IN. ± 3/16 20-100 IN. ± 1/8 ANGLES ± 1/2°	MACHINED	.X ± .020 .XX ± .010 .XXX ± .005 ANGLES ± 1/4°

ITEM	PART NO.	PART NAME		REQ.	WT. EA.
1	1000963M16-F13	SAFETY EXTENSION PORT		1	
2	1000964MG8-FNA	GASKET		1	
3	9801374M04-FG2	SCREW 5/8"-11 NC X 3" LG.		8	
4	8115336	WASHER FLAT 5/8"	304 S.S.	8	
5	8116635	NUT ESNA 5/8"-11 NC	304 S.S.	8	

LITTLEFORD DAY, INC. CLAIMS PROPRIETARY RIGHTS IN THE MATERIAL DISCLOSED HEREON. THIS DRAWING IS ISSUED FOR ENGINEERING INFORMATION ONLY AND MAY NOT BE USED FOR MANUFACTURING PURPOSES WITHOUT WRITTEN PERMISSION FROM LITTLEFORD DAY, INC. TO THE USER.

REV.	DESCRIPTION	DATE	BY
H			
G			
F			
D			
C			
B			
A			

Littleford Day
LITTLEFORD DAY, INC.
7451 EMPIRE DR. FLORENCE, KY. 41042-2985

4" BALL VALVE SAFETY
EXTENSION INSTALLATION

DR. WHvL	DATE: 3-5-97
CK.	SCALE:
AP.	DATE:
1000965 M43-F13	

DRAWING NO.	410 70

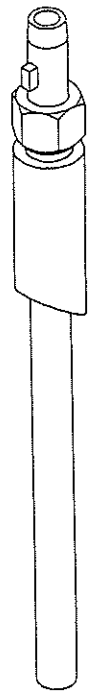

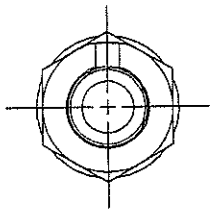

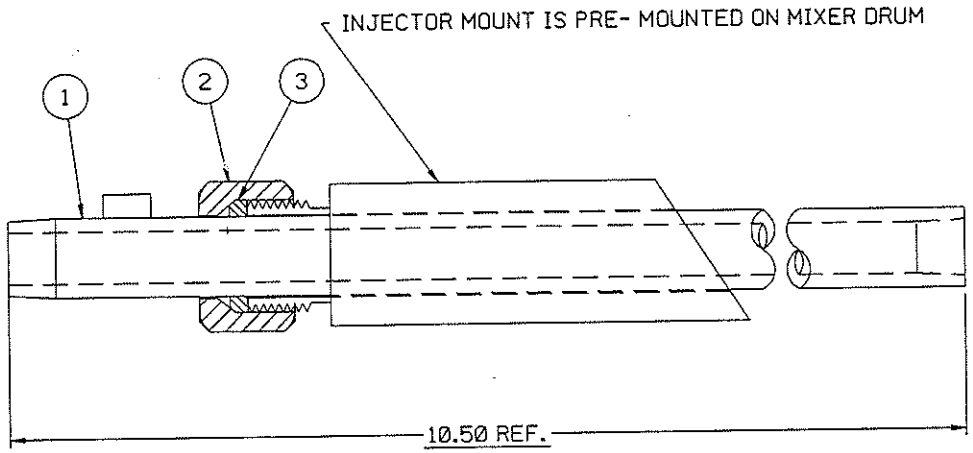

REV.	DESCRIPTION	DATE	BY
C			
B			
A			

Littleford Technology CAD/CAM/CAE Mixing Drying Reacting

UNLESS SPECIFIED	TOLERANCES UNLESS SPECIFIED	
DEBURR ALL HOLES	FABRICATED	MACHINED
BREAK SHARP EDGES	0-20 IN. ± 1/16	.X ± .020
	20-100 IN. ± 1/8	.XX ± .010
	100 + IN. ± 3/16	.XXX ± .005
✓ FINISH UNLESS SPECIFIED	ANGLES ± 1/2°	ANGLES ± 1/4°

LITTLEFORD BROS., INC. CLAIMS PROPRIETARY RIGHTS IN THE MATERIAL DISCLOSED HEREON. THIS DRAWING IS ISSUED FOR ENGINEERING INFORMATION ONLY AND MAY NOT BE USED FOR MANUFACTURING PURPOSES WITHOUT WRITTEN PERMISSION FROM LITTLEFORD BROS., INC. TO THE USER.

Littleford
LITTLEFORD BROS., INC.
7451 EMPIRE DR. FLORENCE, KY. 41042-2985

LANCE LIQUID INJECTOR ASS'Y

DR. W.M.H.	DATE: 3-28-95	
CK.	SCALE: FULL	
AP.	DATE:	
4107170		REV.

4107170
M44-FNA

TOLERANCES UNLESS SPECIFIED

	FABRICATED	MACHINED
FRACTION	± 1/32	± 1/64
ANGULAR	± 1/2°	± 1/4°

ITEM	PART NO.	PART NAME	REQ.	WT. EACH
	4107168M16-FUP	LIQUID INJECTOR TUBE	1	
2	8200459M16-FNA	INJECTOR CAP	1	
3	8200460	INJECTOR PACKING	1	

LITTLEFORD BROS., INC. CLAIMS PROPRIETARY RIGHTS IN THE MATERIAL DISCLOSED HEREON. THIS DRAWING IS ISSUED FOR ENGINEERING INFORMATION ONLY AND MAY NOT BE USED FOR MANUFACTURING PURPOSES WITHOUT WRITTEN PERMISSION FROM LITTLEFORD BROS., INC. TO THE USER.

REV	DESCRIPTION	DATE	BY
H			
G			
E			
D			
C			
B			
A			

Littleford
LITTLEFORD BROS., INC.
7451 Empire Dr. Florence, Ky. 41042-2985

LANCE LIQUID INJECTOR ASSEMBLY

DR. WVL CK. TR.
DATE: 2/18/97 SCALE: NO

4107170
M44-FNA

OHIO BLUEPRINT

DRAWING NO. 1000860

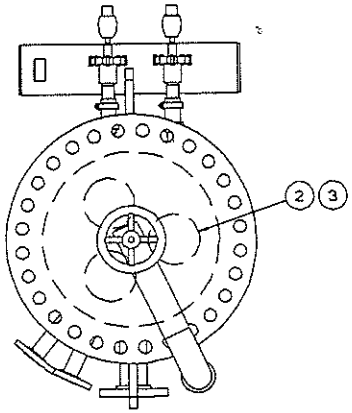

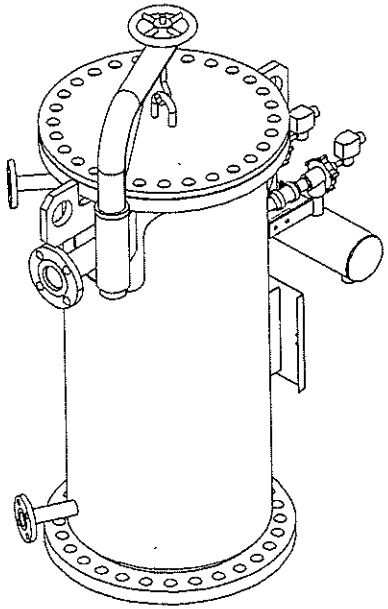

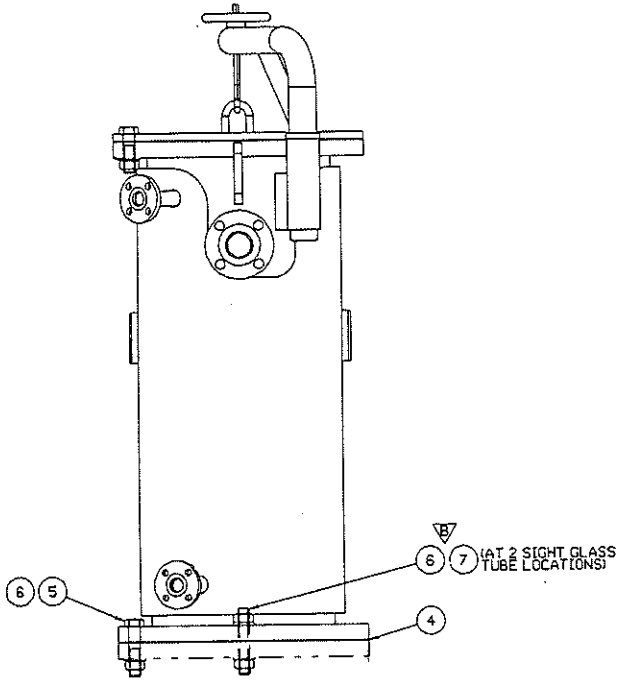

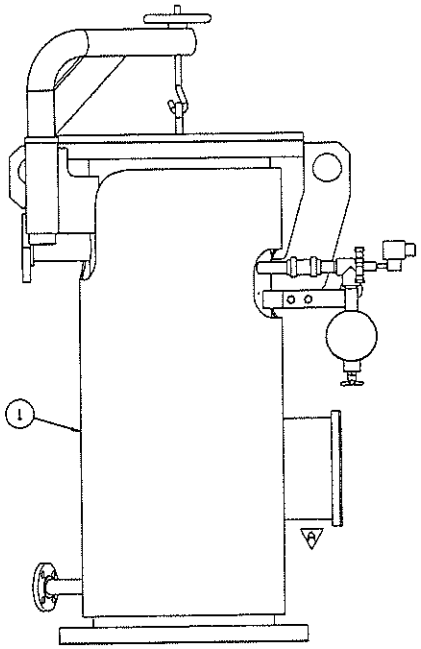

REV.	DESCRIPTION	DATE	BY
C			
B	added holes for sight glass loc.	5-5-97	WH.L
A	ROTATED N.P. BRCTS 180°	4-9-97	WH.L

Littleford Technology CAD/CAM/CAE Drafting Modeling

UNLESS SPECIFIED	TOLERANCES UNLESS SPECIFIED	
DEBURR ALL HOLES	FABRICATED	MACHINED
BREAK SHARP EDGES	0-20 IN. ± 1/16	.X ± .020
	20-100 IN. ± 1/8	.XX ± .010
✓ FINISH UNLESS SPECIFIED	100 + IN. ± 3/16	.XXX ± .005
	ANGLES ± 1/2°	ANGLES ± 1/4°

LITTLEFORD DAY, INC. CLAIMS PROPRIETARY RIGHTS IN THE MATERIAL DISCLOSED HEREON. THIS DRAWING IS ISSUED FOR ENGINEERING INFORMATION ONLY AND MAY NOT BE USED FOR MANUFACTURING PURPOSES WITHOUT WRITTEN PERMISSION FROM LITTLEFORD DAY, INC. TO THE USER.

Littleford Day
LITTLEFORD DAY, INC.
745 EMPIRE DR. FLORENCE, KY. 40042-2985

PULSEBACK FILTER INSTALLATION

DR. WH.L DATE: 3-14-97
CK. SCALE: 3/16"=1'
AP. DATE:

1000860 REV. B

DRAWING NO. 1000859

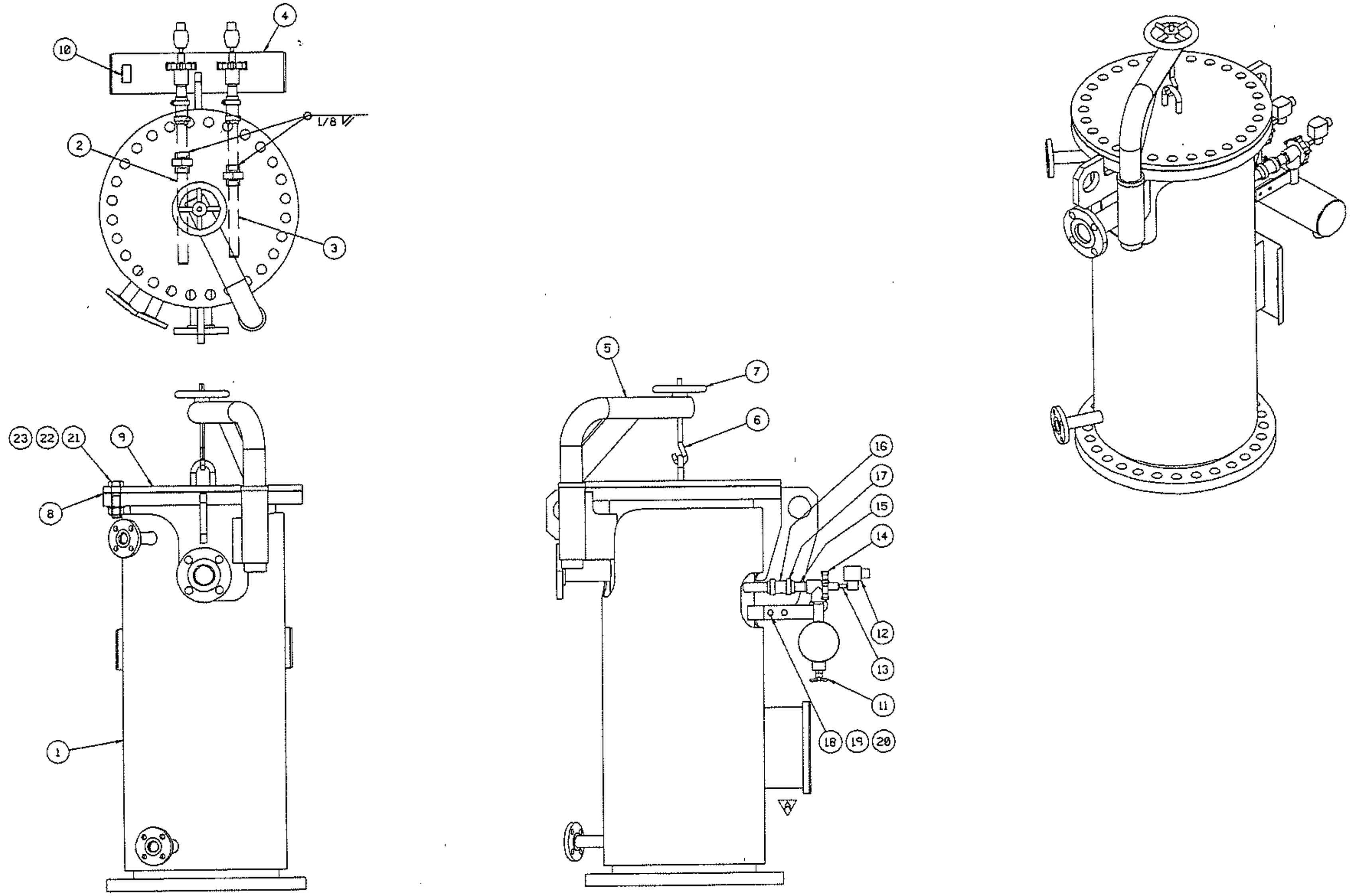

UNLESS SPECIFIED	TOLERANCES UNLESS SPECIFIED	
DEBURR ALL HOLES BREAK SHARP EDGES	FABRICATED	MACHINED
✓ FINISH UNLESS SPECIFIED	0-20 IN. ± 1/16 20-100 IN. ± 1/8 100 + IN. ± 3/16 ANGLES ± 1/2°	.X ± .020 .XX ± .010 .XXX ± .005 ANGLES ± 1/4°

LITTLEFORD DAY, INC. CLAIMS PROPRIETARY RIGHTS IN THE MATERIAL DISCLOSED HEREON. THIS DRAWING IS ISSUED FOR ENGINEERING INFORMATION ONLY AND MAY NOT BE USED FOR MANUFACTURING PURPOSES WITHOUT WRITTEN PERMISSION FROM LITTLEFORD DAY, INC. TO THE USER.

Littleford Day
LITTLEFORD DAY, INC.
7451 EMPIRE DR. FLORENCE, KY. 41042-2985

PULSEBACK FILTER ASSEMBLY
15.50 I.D. - 7 SQ. FEET

DR. WHvL	DATE: 3-14-97
CK.	SCALE: 3/16"=1"
AP.	DATE:
1000859	REV. A

REV.	DESCRIPTION	DATE	BY
C			
B			
A	ROTATED H.P. BRCTS 180°	4-9-97	WHvL

Littleford Technology CAD/CAM/CAE Mixing Drying Reacting

1000860 M43*F13	TOLERANCES UNLESS SPECIFIED	FABRICATED	0-20 IN. ± 1/16 100 + IN. ± 3/16 20-100 IN. ± 1/8 ANGLES ± 1/2°	MACHINED	.X ± .020 .XX ± .010. .XXX ± .005 ANGLES ± 1/4°

ITEM	PART NO.	PART NAME	REQ.	WT. EA.
1	1000859M43*F13	PULSEBACK FILTER ASSEMBLY	1	
2	1000923	FILTER BAG CAGE	3	
3	1000924	FILTER BAG	3	
4	1000987MG8-FNA	GASKET	1	
5	9801814M01PFA1	SCREW 1"-8 NC X 4.50 LG. HHC	24 A	
6	9801158M01QFA6	NUT HEX 1"-8 NC	32 A	
A 7	1001042M01PFA1	STUD 1"-8 NC X 6" LG.	4	

LITTLEFORD DAY, INC. CLAIMS PROPRIETARY RIGHTS IN THE MATERIAL DISCLOSED HEREON. THIS DRAWING IS ISSUED FOR ENGINEERING INFORMATION ONLY AND MAY NOT BE USED FOR MANUFACTURING PURPOSES WITHOUT WRITTEN PERMISSION FROM LITTLEFORD DAY, INC. TO THE USER.

REV.	DESCRIPTION	DATE	BY
H			
G			
F			
E			
D			
C			
B			
A	added #7; qty of #5 & 6 was 28	6-6-97	WHvL

Littleford Day

LITTLEFORD DAY, INC.
7451 EMPIRE DR. FLORENCE, KY. 41042-2985

PULSEBACK FILTER INSTALLATION
15.50 I.D. - 7 SQ. FEET

DR. WHvL	DATE: 3-15-97
CK.	SCALE:
AP.	DATE:
1000860 M43*F13	

1000859 M43*F13	TOLERANCES UNLESS SPECIFIED	FABRICATED	0-20 IN. ± 1/16 100 + IN. ± 3/16 20-100 IN. ± 1/8 ANGLES ± 1/2°	MACHINED	.X ± .020 .XX ± .010 .XXX ± .005 ANGLES ± 1/4°

ITEM	PART NO.	PART NAME	REQ.	WT. EA.
1	1000858M43*F13	DRUM HYDRO	1	
2	1000981M16*FUP	BLOWPIPE WELDMENT	1	
3	1000982M16*FUP	BLOWPIPE WELDMENT	1	
4	1000974M16-FUP	COMPRESSED GAS HEADER WELDMENT	1	
5	1000984M16-FUP	DAVIT ARM WELDMENT	1	
6	4102168M04-FNA	LIFTING HOOK	1	
7	4102159	HAND WHEEL	1	
8	1000987MG8-FNA	GASKET	1	
9	1000986M16*FUP	COVER WELDMENT	1	
10	1000715	PRESSURE GAUGE	1	
11	1000714	DRAIN COCK	1	
12	1000709	SOLENOID VALVE #EF8262G2	2	
13	4101986M04-FNA	NIPPLE SHORT 1/8" NPT	2	
14	1000710	PULSE VALVE #8353C33-V	2	
15	1000712M04-FNA	PIPE 3/4" SCH. 40 X 3.25 LG.	2	
16	1000711	HOSE 1" I.D. RUBBER	2	
17	4101400	HOSE CLAMP	4	
18	9801304M04-FG2	SCREW 3/8"-16 NC X 1.25 LG. HHC	4	
19	8116847	NUT ESNA 3/8"-16 NC	4	
20	9801532M04-FNA	WASHER FLAT 3/8"	4	
21	9801418M01PFA1	SCREW 1"-8 NC X 4" LG. HHC	28	
22	9801566M01-FNA	WASHER LOCK 1"	28	
23	9801158M01QFA6	NUT HEX 1"-8 NC	28	

LITTLEFORD DAY, INC. CLAIMS PROPRIETARY RIGHTS IN THE MATERIAL DISCLOSED HEREON. THIS DRAWING IS ISSUED FOR ENGINEERING INFORMATION ONLY AND MAY NOT BE USED FOR MANUFACTURING PURPOSES WITHOUT WRITTEN PERMISSION FROM LITTLEFORD DAY, INC. TO THE USER.

REV.	DESCRIPTION	DATE	BY
H			
G			
D			
C			
B			
A			

Littleford Day
LITTLEFORD DAY, INC.
7451 EMPIRE DR. FLORENCE, KY. 41042-2985

PULSEBACK FILTER ASSEMBLY

DR. WHvL	DATE: 3-14-97
CK.	SCALE:
AP.	DATE:
1000859	
M43*F13	

DRAWING NO. 1000862

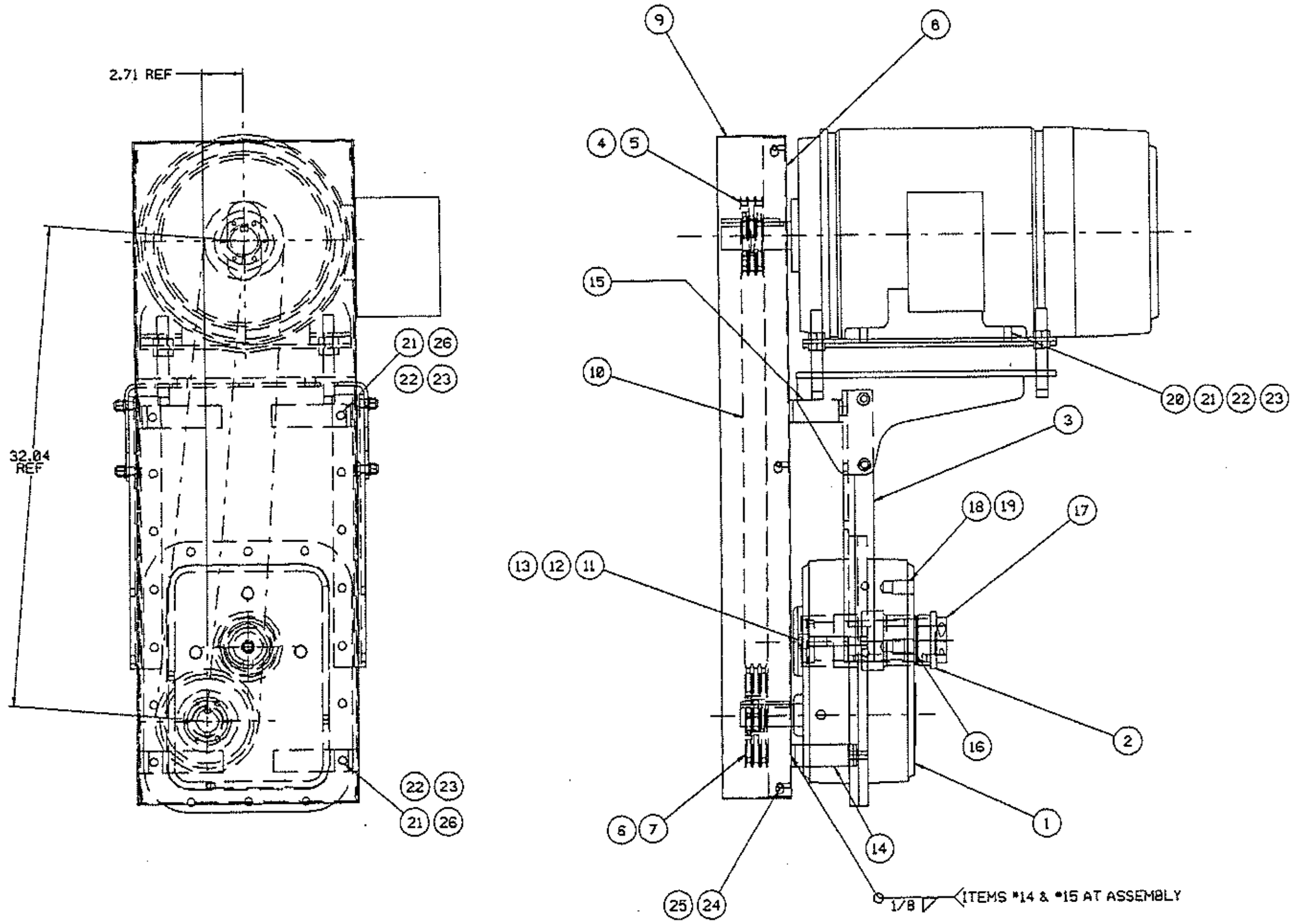

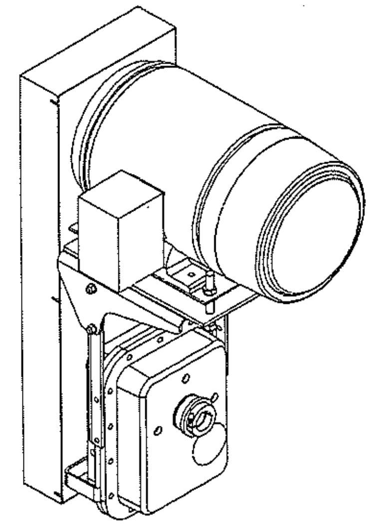

DRIVE ASS'Y HP - 15 (25 HP FRAME)
MOTOR RPM - 1750 (BASE)
MAINSHAFT RPM - 140 (BASE)
FALK REDUCER MODEL - 4207JF09A
EXACT RATIO - 9.492
FALK MOTOR MOUNT MODEL - MM4207J2
MOTOR FRAME SIZE - 284T TEFC-XP (VFD DUTY)
DRIVER SHEAVE - 3V 5.3 3GR
DRIVEN SHEAVE - 3V 6.9 3GR
SHEAVE RATIO - 1.30
BELT SET - 3VX850(3)
SHEAVE CENTERS - 32.9

REV.	DESCRIPTION	DATE	BY
C			
B			
A			

Littleford Technology CAD/CAM/CAE Mixing Drying Reacting

UNLESS SPECIFIED	TOLERANCES UNLESS SPECIFIED	
	FABRICATED	MACHINED
DEBURR ALL HOLES BREAK SHARP EDGES	0-20 IN. ± 1/16	.X ± .020
	20-100 IN. ± 1/8	.XX ± .010
✓ FINISH UNLESS SPECIFIED	100 + IN. ± 3/16	.XXX ± .005
	ANGLES ± 1/2°	ANGLES ± 1/4°

LITTLEFORD DAY, INC. CLAIMS PROPRIETARY RIGHTS IN THE MATERIAL DISCLOSED HEREON. THIS DRAWING IS ISSUED FOR ENGINEERING INFORMATION ONLY AND MAY NOT BE USED FOR MANUFACTURING PURPOSES WITHOUT WRITTEN PERMISSION FROM LITTLEFORD DAY, INC. TO THE USER.

Littleford Day
LITTLEFORD DAY, INC.
7451 EMPIRE DR. FLORENCE, KY. 41042-2985
15 HP DRIVE INSTALLATION

DR. SWD | DATE: 12/19/96
CK. | SCALE: 1/4"=1"
AP. | DATE:
1000862 | REV.

1000862 M43-FUP	TOLERANCES UNLESS SPECIFIED	FABRICATED	0-20 IN. ± 1/16 100 + IN. ± 3/16 20-100 IN. ± 1/8 ANGLES ± 1/2°	MACHINED	.X ± .020 .XX ± .010 .XXX ± .005 ANGLES ± 1/4°

ITEM	PART NO.	PART NAME	REQ.	WT. EA.
1	4100177	REDUCER FALK #4207JF09A 9.492:1	1	
2	4100178	BUSHING FALK #BU4207J-1.938	1	
3	8200750	MOUNT MOTOR FALK #MM4207J-2	1	
4	8115577	SHEAVE 3V 5.3 3GR	1	
5	4103368	BUSHING "SDS X 1-7/8"	1	
6	9110482	SHEAVE 3V 6.9 3GR	1	
7	4110308	BUSHING "SDS X 1-1/2"	1	
8	1000865M01-FUP	WLDMT REAR DRIVE GUARD COVER	1	
9	1000863M01-FUP	COVER FRONT DRIVE GUARD	1	
10	4107917	BELT 3VX850 (3)	1	
11	4100179	PLATE THRUST FALK #TP4207J	1	
12	9801337M01-FG5	SCREW HHC 1/2-13 UNC X 2 LG	1	
13	9801534M01-FNA	WASHER FLAT 1/2 DIA	1	
14	4103379M01-FNA	BRACKET GUARD MOUNTING	2	
15	4103380M01-FNA	BRACKET GUARD MOUNTING	2	
16	4100421M01-FNA	REGISTER	1	
17	4100297M01-FNA	COLLAR SET 1-15/16 DIA	1	
18	9806062M01-FG2	SCREW HHC 7/8-9 UNC X 1-3/4 LG	3	
19	9801565M01-FNA	WASHER LOCK 7/8 DIA	3	
20	9801337M01-FG2	SCREW HHC 1/2-13 UNC X 2 LG	4	
21	9801149M01-FNA	NUT HEX 1/2-13 UNC	8	
22	9801534M01-FNA	WASHER FLAT 1/2 DIA	8	
23	4100329M01-FNA	WASHER LOCK 1/2 DIA	8	
24	9801264M01-FG2	SCREW HHC 1/4-20 UNC X 1/2 LG	6	
25	9801557M01-FNA	WASHER LOCK 1/4 DIA	6	
26	9801331M01-FG2	SCREW HHC 1/2-13 UNC X 1-1/4 LG	4	

LITTLEFORD DAY, INC. CLAIMS PROPRIETARY RIGHTS IN THE MATERIAL DISCLOSED HEREON. THIS DRAWING IS ISSUED FOR ENGINEERING INFORMATION ONLY AND MAY NOT BE USED FOR MANUFACTURING PURPOSES WITHOUT WRITTEN PERMISSION FROM LITTLEFORD DAY, INC. TO THE USER.

REV.	DESCRIPTION	DATE	BY
H			
G			
D			
C			
B			
A			

Littleford Day
LITTLEFORD DAY, INC.
7451 EMPIRE DR. FLORENCE, KY. 41042-2985

15 HP DRIVE INSTALLATION

DR. SWD	DATE: 12/19/96
CK.	SCALE:
AP.	DATE:
1000862 M43-FUP	

Drawing No. 3300339

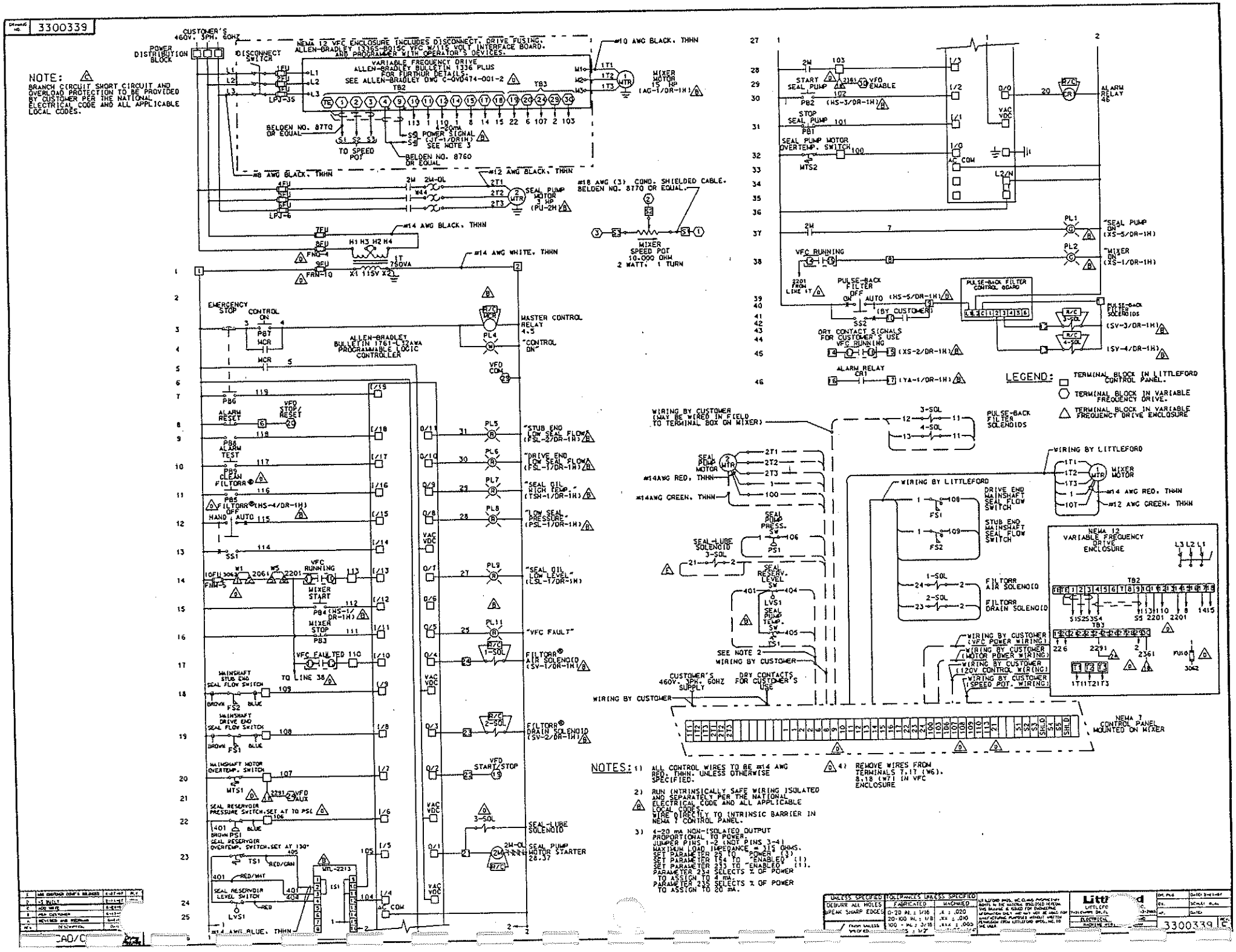

DRAWING NO. 3300435

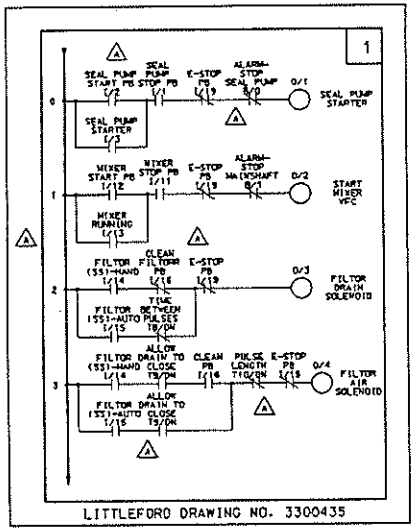

LITTLEFORD DRAWING NO. 3300435

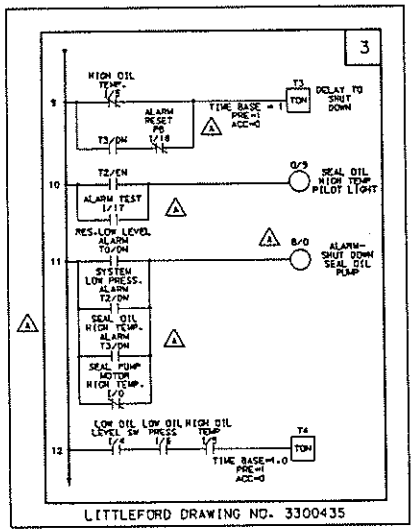

LITTLEFORD DRAWING NO. 3300435

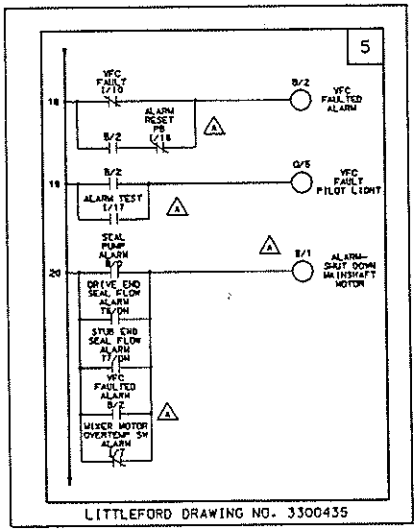

LITTLEFORD DRAWING NO. 3300435

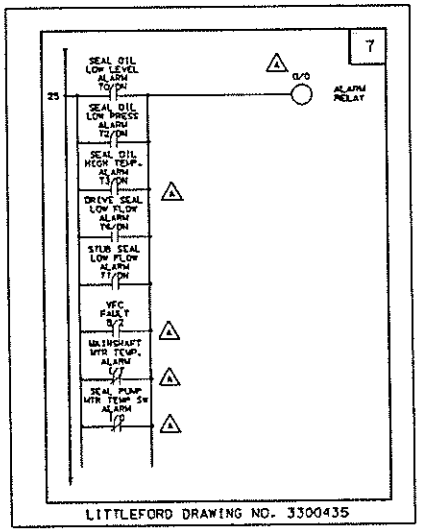

LITTLEFORD DRAWING NO. 3300435

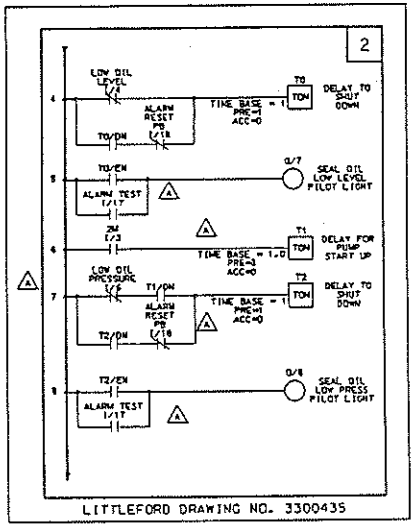

LITTLEFORD DRAWING NO. 3300435

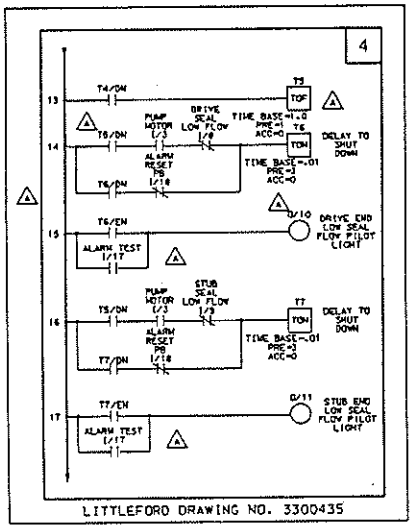

LITTLEFORD DRAWING NO. 3300435

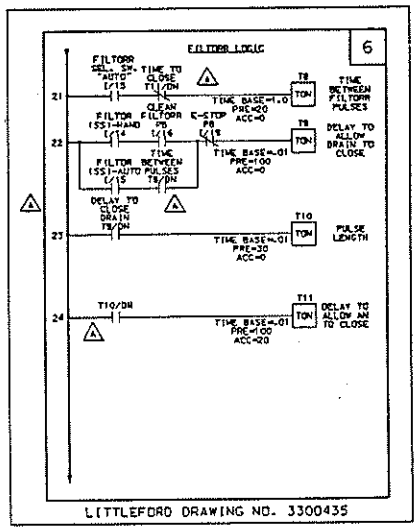

LITTLEFORD DRAWING NO. 3300435

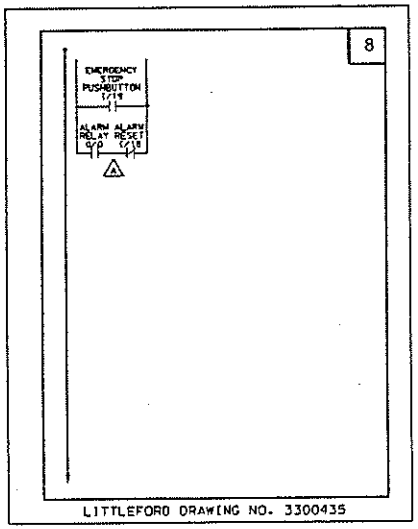

LITTLEFORD DRAWING NO. 3300435

REV.	DESCRIPTION		
A	RE-DRAWN		

CAD/

UNLESS SPECIFIED	TOLERANCES UNLESS SPECIFIED		
DEBURR ALL HOLES	FABRICATED	MACHINED	
BREAK SHARP EDGES	0-20 IN. ± 1/16	.X ± .020	
	20-100 IN. ± 1/8	.XX ± .010	
	100 + IN. ± 3/16	.XXX ± .005	
FINISH UNLESS SPECIFIED	ANGLES ± 1°		

LITTLEFORD BROS., INC. CLAIMS PROPRIETARY RIGHTS IN THE MATERIAL REGARDED HEREIN. THIS DRAWING IS ISSUED FOR CONFIDENTIAL INFORMATION ONLY AND MAY NOT BE USED FOR MANUFACTURING PURPOSES WITHOUT WRITTEN PERMISSION FROM LITTLEFORD BROS., INC. TO THE USER

Littleford

LITTLEFORD BROS., INC.
7451 EDISON AVENUE
CINCINNATI, OHIO 45216-2399

DR.		DATE
CK.		DATE
AP.		DATE

3300435 A

DRAWING NO. 3300436

PARAMETER	DESCRIPTION	STANDARD DEFAULT SETTING	AS SHIPPED SETTING	AS INSTALLED SETTING
5	FREQ SELECT 1	ADAPTER 1	REMOTE POT	
6	FREQ SELECT 2	PRESET 1	ADAPTER 1	
7	ACCEL TIME 1	10.0 SECS	DEFAULT	
8	DECEL TIME 1	10.0 SECS	DEFAULT	
9	CONTROL SELECT	SENS VECTOR	DEFAULT	
10	STOP SELECT 1	COAST	DEFAULT	
11	BUS LIMIT EN	DISABLED	DEFAULT	
12	DC HOLD TIME	0 SEC	DEFAULT	
13	DC HOLD LEVEL	0%	DEFAULT	
14	RUN ON POWER UP	DISABLED	DEFAULT	
15	RESET/RUN TIME	1.0 SEC	DEFAULT	
16	MINIMUM FREQ	0 HZ	15 HZ	
17	BASE FREQ	60 HZ	DEFAULT	
18	BASE VOLTAGE	MAX RATED	DEFAULT	
19	MAXIMUM FREQ	60 HZ	DEFAULT	
20	MAXIMUM VOLTAGE	MAX RATED	DEFAULT	
21	INPUT MODE	1	12	
22	MOP INCREMENT	1.1 HZ/SEC	DEFAULT	
24	JOG FREQUENCY	10 HZ	DEFAULT	
25	ANALOG OUT SELECT	FREQUENCY	POWER	
27	PRESET FREQ 1	0.0 HZ	DEFAULT	
28	PRESET FREQ 2	0.0 HZ	DEFAULT	
29	PRESET FREQ 3	0.0 HZ	DEFAULT	
30	ACCEL TIME 2	10.0 SECS	DEFAULT	
31	DECEL TIME 2	10.0 SECS	DEFAULT	
32	SKIP FREQ 1	400 HZ	DEFAULT	
33	SKIP FREQ 2	400 HZ	DEFAULT	
34	SKIP FREQ 3	400 HZ	DEFAULT	
35	SKIP FREQ BAND	0 HZ	DEFAULT	
36	CURRENT LIMIT	150%	DEFAULT	
37	OVERLOAD MODE	NO DERATING	DEFAULT	
38	OVERLOAD AMPS	115% RATED A	21.4	
39	FLT CLEAR MODE	ENABLED	DEFAULT	
40	LINE LOSS FAULT	DISABLED	DEFAULT	
41	MOTOR TYPE	INDUCTION	DEFAULT	
42	SLIP @ F.L.A.	1.0 HZ	DEFAULT	
43	DWELL FREQUENCY	0.0 HZ	DEFAULT	
44	DWELL TIME	0 SECS	DEFAULT	
45	PWM FREQUENCY	4 KHZ	DEFAULT	
46	PULSE/ENC SCALE	1024 PPR	DEFAULT	
47	LANGUAGE	ENGLISH	DEFAULT	
48	START BOOST	0 VLTS	DEFAULT	
49	BREAK FREQUENCY	25% MAX FREQ	DEFAULT	
50	BREAK VOLTAGE	25% RATED V	DEFAULT	
51	CLEAR FAULT	READY	DEFAULT	
52	STOP SELECT 2	COAST	DEFAULT	
56	S CURVE TIME	0.0 SECS	DEFAULT	
57	S CURVE ENABLE	DISABLED	DEFAULT	
64	SET DEFAULTS	READY	READY	
73	PRESET FREQ 4	0.0 HZ	DEFAULT	
74	PRESET FREQ 5	0.0 HZ	DEFAULT	
75	PRESET FREQ 6	0.0 HZ	DEFAULT	
76	PRESET FREQ 7	0.0 HZ	DEFAULT	
77	SPEED CONTROL	SLIP COMP	DEFAULT	

PARAMETER	DESCRIPTION	STANDARD DEFAULT SETTING	AS SHIPPED SETTING	AS INSTALLED SETTING
78	TRAVERSE PERIOD	0.00 SECS	DEFAULT	
79	MAX TRAVERSE	0.00 HZ	DEFAULT	
80	P JUMP	0.00 HZ	DEFAULT	
81	BLWN FUSE FLT	ENABLED	DEFAULT	
82	CUR LIM TRIP EN	DISABLED	DEFAULT	
83	RUN BOOST	0 VLTS	DEFAULT	
85	RESET/RUN TRIES	0	DEFAULT	
90	ANALOG TRIM EN	DISABLED	DEFAULT	
91	LOW BUS FAULT	ENABLED	DEFAULT	
92	LOGIC MASK	01111111	DEFAULT	
93	LOCAL MASK	01111111	DEFAULT	
94	DIRECTION MASK	01111110	DEFAULT	
95	START MASK	01111111	DEFAULT	
96	JOG MASK	01111111	DEFAULT	
97	REFRENCE MASK	01111111	DEFAULT	
98	ACCEL MASK	01111111	DEFAULT	
99	DECEL MASK	01111111	DEFAULT	
100	FAULT MASK	01111111	DEFAULT	
101	MOP MASK	01111111	DEFAULT	
111	DATA IN A1	0	DEFAULT	
112	DATA IN A2	0	DEFAULT	
113	DATA IN B1	0	DEFAULT	
114	DATA IN B2	0	DEFAULT	
115	DATA IN C1	0	DEFAULT	
116	DATA IN C2	0	DEFAULT	
117	DATA IN D1	0	DEFAULT	
118	DATA IN D2	0	DEFAULT	
119	DATA OUT A1	0	DEFAULT	
120	DATA OUT A2	0	DEFAULT	
121	DATA OUT B1	0	DEFAULT	
122	DATA OUT B2	0	DEFAULT	
123	DATA OUT C1	0	DEFAULT	
124	DATA OUT C2	0	DEFAULT	
125	DATA OUT D1	0	DEFAULT	
126	DATA OUT D2	0	DEFAULT	
127	PROCESS 1 PAR	1	DEFAULT	
128	PROCESS 1 SCALE	+1.00	DEFAULT	
129	PROCESS 1 TXT 1	V	DEFAULT	
130	PROCESS 1 TXT 2	O	DEFAULT	
131	PROCESS 1 TXT 3	L	DEFAULT	
132	PROCESS 1 TXT 4	T	DEFAULT	
133	PROCESS 1 TXT 5	S	DEFAULT	
134	PROCESS 1 TXT 6	' '	DEFAULT	
135	PROCESS 1 TXT 7	' '	DEFAULT	
136	PROCESS 1 TXT 8	' '	DEFAULT	
150	4-20mA LOSS SEL	MIN/ALARM	DEFAULT	
151	MAXIMUM SPEED	400 HZ	DEFAULT	
152	ENCODER TYPE	PULSE	DEFAULT	
154	ANLG OUT OFFSET	DISABLED	ENABLED	
155	FLYING START EN	DISABLED	DEFAULT	
156	FSTART FORWARD	60 HZ	DEFAULT	
157	FSTART REVERSE	0 HZ	DEFAULT	
158	CR1 OUT SEL	AT SPEED	RUNNING	
159	DIG OUT FREQ	0.0 HZ	DEFAULT	

PARAMETER	DESCRIPTION	STANDARD DEFAULT SETTING	AS SHIPPED SETTING	AS INSTALLED SETTING
160	DIG OUT CURRENT	0%	DEFAULT	
161	DIG OUT TORQUE	0.0 AMPS	DEFAULT	
165	SPEED KI	100	DEFAULT	
169	BOOST SLOPE	1.5	DEFAULT	
174	CR2 OUT SELECT	RUNNING	FAULT	
175	CR3 OUT SELECT	FAULT	RUNNING	
176	CR4 OUT SELECT	ALARM	RUNNING	
177	MOTOR NP RPM	1750 RPM	1770 RPM	
178	MOTOR NP HERTZ	60 HZ	DEFAULT	
180	PROCESS 2 PAR	54	DEFAULT	
181	PROCESS 2 SCALE	+1.00	DEFAULT	
182	PROCESS 2 TXT 1	A	DEFAULT	
183	PROCESS 2 TXT 2	' '	DEFAULT	
184	PROCESS 2 TXT 3	' '	DEFAULT	
185	PROCESS 2 TXT 4	' '	DEFAULT	
186	PROCESS 2 TXT 5	' '	DEFAULT	
187	PROCESS 2 TXT 6	' '	DEFAULT	
188	PROCESS 2 TXT 7	' '	DEFAULT	
189	PROCESS 2 TXT 8	' '	DEFAULT	
190	MOTOR NP VOLTS	MAX RATED	DEFAULT	
191	MOTOR NP AMPS	MAX RATED	21.4	
192	FLUX AMPS REF	0.0 AMPS	DEFAULT	
193	KP AMPS	100	DEFAULT	
194	IR DROP VOLTS	0 VOLTS	DEFAULT	
195	SLIP COMP GAIN	1	DEFAULT	
200	FLUX UP TIME	0.0 SEC	DEFAULT	
201	MOTOR OL FAULT	ENABLED	DEFAULT	
203	VT SCALING	DISABLED	DEFAULT	
204	GROUND WARNING	DISABLED	DEFAULT	
206	AALARM MASK	ALL 1'S	DEFAULT	
213	PI CONFIG	00000000	DEFAULT	
215	PI REF SELECT	PRESET 1	DEFAULT	
216	PI FDBK SELECT	0-10 VVOLT	DEFAULT	
221	KI PROCESS	128	DEFAULT	
222	KP PROCESS	256	DEFAULT	
223	PI NEG LIMIT	-8.33%	DEFAULT	
224	PI POS LIMIT	+8.33%	DEFAULT	
225	PI PRELOAD	+0.0 HZ	DEFAULT	
226	SHEER PIN FAULT	DISABLED	DEFAULT	
227	ADAPTIVE I LIMIT	ENABLED	DEFAULT	
228	L LOSS RESTART	TRACK VOLTS	DEFAULT	
229	FREQ REF SSQROOT	DISABLED	DEFAULT	
230	SAVE MOP REF	DISABLED	DEFAULT	
231	HOLD LEVEL SEL	DC HOLD LVL	DEFAULT	
232	CURRENT LMT SEDL	CURRENT LMT	DEFAULT	
233	ABS ANALOG OUT	ENABLED	DEFAULT	
234	SSET ANLG OUT LO	+0.0%	DEFAULT	
235	SET ANLG OUT HI	+100.0%	DEFAULT	
237	SET 0-10 VLT LO	+0.0%	DEFAULT	
238	SET 0-10 VLT HI	+93.2%	DEFAULT	
239	SET 4-20 mA LO	+4.1%	0	
240	SET 4-20 mA HI	+95.1%	100	

NOTE: READ/WRITE (USER CONFIGURABLE) PARAMETERS SHOWN. FOR MORE INFORMATION, REFER TO ALLEN-BRADLEY PUBLICATION 1336 PLUS-5.0.

REV.	DESCRIPTION		BY
C			
B			
A	AS BUILT	-97	RLV

UNLESS SPECIFIED DEBURR ALL HOLES BREAK SHARP EDGES

FINISH UNLESS SPECIFIED

TOLERANCES UNLESS SPECIFIED	
FABRICATED	MACHINED
0-20 IN. ± 1/16	.X ± .020
20-100 IN. ± 1/8	.XX ± .010
100 + IN. ± 3/16	.XXX ± .005
ANGLES ± 1/2°	ANGLES ± 1/4°

LITTLEFORD BROS., INC. CLAIMS PROPRIETARY RIGHTS IN THE MATERIAL DISCLOSED HEREON. THIS DRAWING IS ISSUED FOR ENGINEERING INFORMATION ONLY AND MAY NOT BE USED FOR MANUFACTURING PURPOSES WITHOUT WRITTEN PERMISSION FROM LITTLEFORD BROS., INC. TO THE USER.

Littleford
LITTLEFORD BROS.
7451 EMPIRE DR. FLORENCE

DRIVE CONFIG
ALLEN-BRADLEY 1336

DR. PRC DATE: 6-25-97
CK. SCALE: NA
AP. DATE:

3300436 REV. A