FITTING	DESCRIPTION		GAUGE LENGTH
A	1-1/2" NPT FUEL SUPPLY	13-1/2" LONG	12" LONG
B	1-1/2" NPT FUEL RETURN	13-1/2" LONG	EMPTY WEIGHT
C	2" NPT LOW FUEL SWITCH		11400 LBS.
D	1-1/2" NPT ROCHESTER FUEL GAUGE		
E	2" NPT NORMAL VENT		
F	8" NPT EMERGENCY VENT		
G	1/2" NPT BASIN DRAIN AND ALARM		
H	2" LOCKABLE FUEL FILL		
J	2" NPT HIGH FUEL SWITCH		

MODEL/GAL	CUSTOMER	WO#
2500 GALLON	DSA ENCORE	10265

APPROVAL CHECKLIST	
REVIEWED BY	DATE
GENSET DELIVERY DATE:	
	NO EXCEPTIONS TAKEN / RELEASE FOR PRODUCTION
	NOT APPROVED / REVISE AND SUBMIT
APPROVAL CHECKLIST MUST BE SIGNED PRIOR TO PRODUCTION	

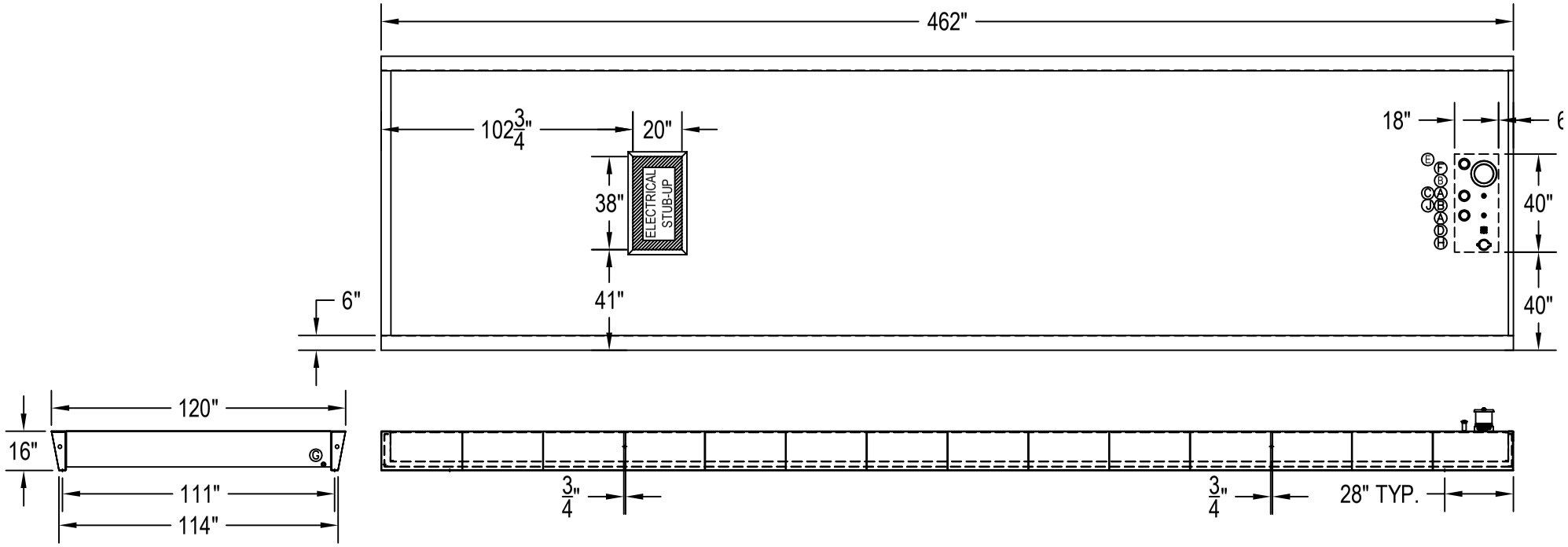

SPECIAL INSTRUCTIONS	
1	LIFTING EYES ARE FOR LIFTING EMPTY FUEL TANK ONLY.

JRS Custom Fab.
OCALA, FLORIDA
PHONE(352) 351-2100 FAX(352) 351-5881

JOB NAME:	FILE	DWG NO.	REV
GRAMTEL	WO	2500 GAL TANK	1

DRAWN BY:	DATE	SCALE	SPEC	UNIT
B.K.	2/21/08	N.T.S.	UL#142 DOUBLE WALL	N/A